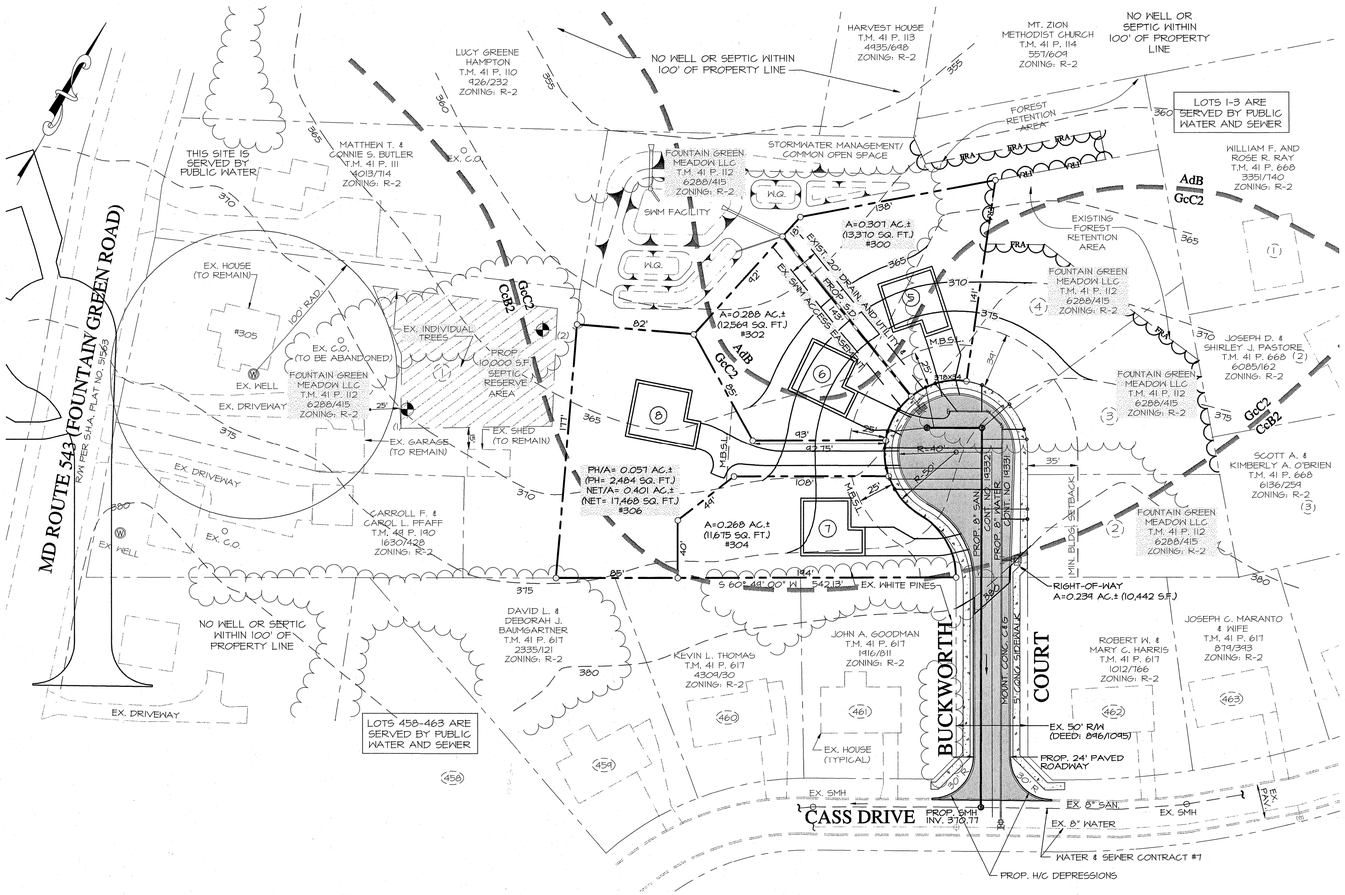

PLAN

SCALE: 1"=50'

LEGEND

- EX. WOODS LINE
- EX. HOUSE
- PROP. HOUSE
- EX. CURB & GUTTER
- PROP. CURB & GUTTER
- PROP. PAVING
- EX. WATER
- PROP. WATER
- EX. SANITARY
- PROP. SANITARY
- PROP. STORM DRAIN
- EsC2 / Cx — SOIL TYPES

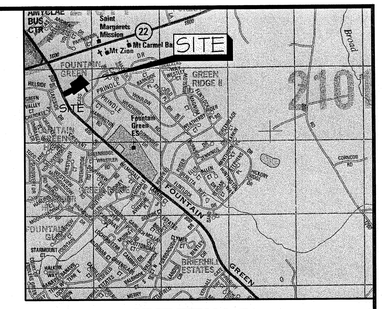

VICINITY MAP

SCALE: 1" = 2000'

A.D.C. MAP NO. 18 GRID A-1

COPYRIGHT ADC THE MAP PEOPLE-PERMITTED USE NUMBER 21001199

PLAN TYPE	SP
PLAN NO.	10-038
SERIES NO.	1
DATE	3/10/10
DAC/DUE	4/7/10

GENERAL NOTES:

1) OWNER: FOUNTAIN GREEN MEADOWS LLC
21 POWELL AVE
BEL AIR, MD 21014

2) DEED REFERENCE: 4697/646

3) TAX MAP: 41 PARCEL: 112

4) EXISTING USE: RESIDENTIAL

5) ZONING: R 2

6) LOTS CREATED AFTER 2/08/1977.

7) TYPE OF DEVELOPMENT - CONVENTIONAL

8) NUMBER OF SINGLE FAMILY LOTS PROPOSED ON ORIGINAL PARCEL: 8

9) NUMBER OF SINGLE FAMILY LOTS ALLOWED ON ORIGINAL PARCEL:
(4.259 AC. x 3.5 DW/GA) = 14

10) #000 DENOTES HOUSE ADDRESS.

11) AREA TABULATION:
TOTAL ENCLOSED AREA - 1.32 AC.±
AREA OF LOTS - 1.32 AC.±

12) PROPOSED FOREST CLEARING = 0.776 AC.

13) PROPOSED PARKING = 16 SPACES (MINIMUM)

14) PROPOSED IMPERVIOUS = 0.597 AC. (THIS PLAN ONLY)

15) LOTS 5-8 WILL BE SERVED BY PUBLIC WATER CONT. NO. 19331 (WATER SERVICES ARE PROVIDED BY GREEN RIDGE UTILITIES INC.) CONT. NO. 19332 UPON APPROVAL OF FINAL PLAT FOR THIS LOTS WATER AND SEWER PLANS WILL BE REVISED TO ADD SERVICES FOR LOTS 5-8.

16) DRIVEWAY ENTRANCE CONSTRUCTION AND LOCATION IS TO BE APPROVED BY THE HARFORD COUNTY DEPARTMENT OF PUBLIC WORKS OR STATE HIGHWAY ADMINISTRATION FOR ALL ENTRANCES FRONTING ON COUNTY OR STATE ROADS.

17) THIS SUBDIVISION MUST COMPLY WITH STATE REGULATIONS FOR UNDERGROUND ELECTRICAL DISTRIBUTION AND TELEPHONE SERVICES.

18) STORM WATER MANAGEMENT AND SEDIMENT CONTROL PLANS ARE APPROVED FOR THIS SITE. A BUILDERS PHASE SEDIMENT CONTROL PLAN WILL BE REQUIRED AND ADDITIONAL BUILDING PAD FILL WILL BE REQUIRED FOR LOTS 5 AND 6.

19) THE TOPOGRAPHY SHOWN HEREON WAS BASED ON HARFORD COUNTY GIS.

20) THE SOILS SHOWN HEREON ARE TAKEN FROM THE SOIL SURVEY OF HARFORD COUNTY AREA, MARYLAND.

21) THE PURPOSE OF THIS PLAN IS TO RECONFIGURE LOT 5 TO CREATE LOTS 6-8 AS SHOWN HEREON.

22) THIS PLAN IS SUBJECT TO REVISION.

FLOOD NOTE

THE PROPERTY SHOWN HEREON IS LOCATED WITHIN ZONE "X" AS SHOWN ON THE F.E.M.A. FLOOD INSURANCE RATE MAP, COMMUNITY PANEL #24025C0166 D, DATED JANUARY 7, 2003 OF HARFORD COUNTY, MARYLAND (INCORPORATED AREAS.) PANEL 166 OF 375

RECEIVED
2010 MAR 10 P 12:18
BAY STATE LAND SERVICES
MAR 10 2010
PRINT DATE

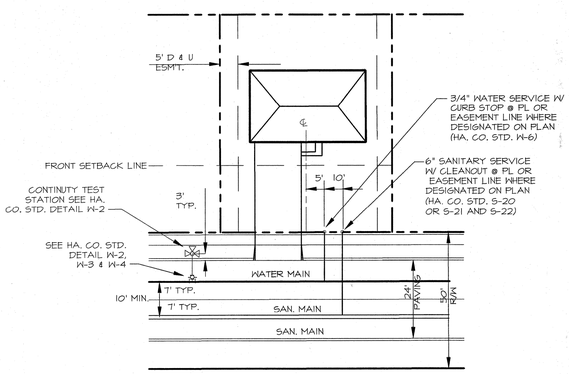

NOTES:
1. CURB STOPS AND CLEANOUTS SHALL BE LOCATED 6" FROM PROPERTY LINE AND SHALL NOT BE LOCATED IN DRIVEWAYS, SIDEWALKS OR STEPS.
2. PLACE UTILITIES ON LOW SIDE OF LOT.
3. MINIMUM SEPARATION BETWEEN WATER AND SEWER SERVICES IS SEVEN (7) FEET.

(PLATE G-2)

SERVICE/ LOT LAYOUT

NOT TO SCALE

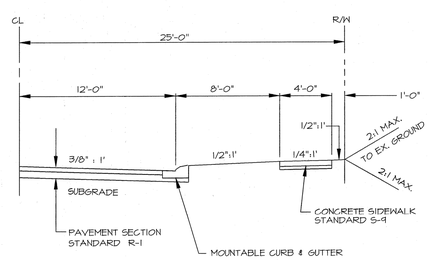

RESIDENTIAL ACCESS ROADWAY SECTION

(PLATE 11)

NOT TO SCALE

NO.	DATE	DESCRIPTION	BY

BAY STATE LAND SERVICES
ENGINEERS * SURVEYORS
ARCHITECTS * LAND PLANNERS
ENVIRONMENTAL CONSULTANTS
P.O. BOX 853
Bel Air, Maryland 21014
PHONE: (410) 879-4747 FAX: (410) 420-3949

SCALE: 1"=50'	DATE: MARCH 9, 2010
JOB NO.: 05040	DRAWN / DESIGN BY: ME / JRO
SHEET: 1 of 1	CHECKED BY: ME

PRELIMINARY PLAN
LOT 5 REVISION

FOUNTAIN GREEN MEADOWS

THIRD ELECTION DISTRICT HARFORD COUNTY, MARYLAND

PREPARED FOR:
SULLIVAN AND KINARD
21 POWELL AVENUE
BEL AIR, MD 21014
PHONE: 410-836-8342