HARFORD COUNTY

DESIGN GUIDELINES

MAY 30, 2006

HARFORD COUNTY, MARYLAND

DEPARTMENT OF PUBLIC WORKS
DIVISION OF WATER AND SEWER

RULES AND REGULATIONS
PART 25

DESIGN GUIDELINES

Lorraine Costello

Lorraine Costello
Director of Administration

5/30/06
Date

In accordance with Section 807 of the County Charter and Administrative Policy No. 100-02, a public hearing was held on May 11, 2006 for a comprehensive update to the Design Guidelines. These guidelines became effective on the date note above.

HARFORD COUNTY

DESIGN GUIDELINES

MAY 30, 2006

HARFORD COUNTY, MARYLAND

DEPARTMENT OF PUBLIC WORKS
DIVISION OF WATER AND SEWER

CHAPTER 1	INTRODUCTION AND GENERAL INFORMATION
CHAPTER 2	ENGINEERING EVALUATIONS
CHAPTER 3	WATER MAIN DESIGN
CHAPTER 4	SEWER MAIN DESIGN
CHAPTER 5	COMMON DESIGN GUIDELINES
CHAPTER 6	WASTEWATER PUMPING STATION AND FORCE MAIN DESIGN
CHAPTER 7	WATER BOOSTER STATION DESIGN
CHAPTER 8	LOW PRESSURE SEWER DESIGN
CHAPTER 9	DESIGN GUIDELINES AND PROCEDURES FOR SOUTHWEST FACILITIES

CHAPTER 1

INTRODUCTION AND GENERAL INFORMATION

CHAPTER 1
INTRODUCTION AND GENERAL INFORMATION

			Page No.
1.1	**Introduction**		**25-1**
	A.	History and Need for Guidelines	25-1
	B.	Authorization	25-1
	C.	Purpose of the Guidelines	25-2
	D.	Basic Principles	25-2
	E.	Waivers	25-4
	F.	Jurisdiction	25-4
1.2	**Abbreviations**		**25-5**
1.3	**Definitions**		**25-6**
1.4	**Projects Defined**		**25-7**
	A.	Developer Projects	25-7
	B.	Capital Projects	25-7
1.5	**Water and Sewer System Description**		**25-7**
	A.	General	25-7
	B.	Water System	25-7
	C.	Sewer System	25-8
	D.	Water and Sewer Charges	25-9
1.6	**Project Development**		**25-9**
	A.	Developer Projects	25-9
	B.	Capital Projects	25-10
1.7	**Approval of Plans and Specifications**		**25-11**
	A.	Plans	25-11
	B.	Specifications	25-12
	C.	Other Documents	25-13
1.8	**Engineering Evaluations**		**25-13**
1.9	**Preparation of Construction Drawings**		**25-14**
	A.	General	25-14
	B.	Purpose	25-14
	C.	Miscellaneous Information	25-15
	D.	Drafting and Graphic Standards	25-15
	E.	Standards for Depicting Existing Conditions	25-21
1.10	**Preparation of Construction Specifications**		**25-22**
	A.	General	25-22
	B.	Specification Format	25-22
	C.	Standardized Specification Sections	25-22
	D.	Sewage Pumping Stations, Water Booster Stations, Water Storage Tanks, Treatment Facilities	25-23

1.11 Construction Drawing Revisions **25-23**
A. General 25-23
B. Method of Revision 25-23
C. Revision Process 25-24
D. Revision Format 25-24

1.12 Addition of New Sheets to Previously Approved Construction Drawings **25-24**
A. General 25-24

1.13 Record Drawings **25-25**
A. General 25-25
B. Procedures 25-25
C. Requirement 25-25
D. Disclaimer 25-29
E. Digital Data License Agreement 25-29

Appendix
- General Notes (Developer Projects) 25-31
- General Notes (Capital Projects) 25-33

CHAPTER 1
INTRODUCTION AND GENERAL INFORMATION

1.1 Introduction

A. History and the Need for Guidelines

Air, water, food, heat and light constitute the five essentials for human existence. The enclosed information focuses on the development, transportation, processing and disposal of unused and used potable water. Man's search for pure water and disposing of human waste began in pre-historic times. Early development of western civilizations with the lack of sanitary water and sewer facilities resulted in widespread death and infection from water-borne diseases. The impacts of technology, urbanization and population growth has developed the need to produce and deliver safe and reliable potable water and to properly collect, treat and dispose of human wastes in a manner that is not harmful to human health and the environment.

The enactment of the Federal Water Pollution Control Act, the Clean Water Act, the Water Quality Act, the Safe Drinking Water Act, and subsequent amendments established national policies for the development, protection, treatment and delivery of safe, reliable and adequate supplies of potable water and the proper collection, treatment and disposal of wastewater which will not harm the environment or public water supplies. These policies have set the standards for which owners of municipal water and sewer systems must comply. Additionally, the State of Maryland, Department of the Environment (formerly the Department of Health and Mental Hygiene) has established design guidelines for sewerage facilities. The following design guidelines stem from the promulgation of the above federal regulations, state guidelines, Ten States Standards, prior experience in Harford County and sound engineering judgment.

B. Authorization

Chapter 256 of the Harford County Code set forth the right of the Division of Water and Sewer to establish Rules and Regulations pursuant with Section 807 of the Harford county Charter which shall govern the requirements of all public water and sewer facilities.

Under the direction of the Director of Public Works, delegation of authority has been granted to the Division of Water and Sewer with regards to the development and enforcement of the Harford County Water and Sewer Design Guidelines. The Harford County Division of Water and Sewer Design Guidelines are incorporated into Part 25 of the General Rules and Regulations.

C. Purpose of the Guidelines

The Water and Sewer Design Guidelines are intended to provide a summary of information, procedures, criteria and practices, which are applicable to the undertaking of public water and sewer projects within Harford County. The procedural aspects presented represent current County practices, which to some degree may be considered fluid as these standards are in continuous evolution, subject to both administrative and legislative action at federal, state and local governmental levels. The design criteria and engineering practices set forth in this manual shall be considered firm requirements for the development of water and sewer projects in Harford County.

The engineering requirements included in this manual are intended to assist land developers and engineers with designing and building public water and sewer facilities within Harford County. Developer Projects and Capital Projects, sponsored by private Developers and the County administration, respectively, shall conform to the procedures, requirements and criteria set forth herein.

The guidelines are not intended to restrict the Engineer's opportunity to create innovative, practical and economical designs for water and sewer system improvements. Rather, it is intended to assist the Engineer in completing the projects efficiently and economically within the framework of design parameters established therein.

D. Basic Principles

These design guidelines are founded upon several basic principles of environmental sanitation and safety, ease of maintenance, efficiency, reliability, durability, cost effectiveness, and aesthetics to the design, construction, and operation of the County's water and sewer systems.

Principle No. 1 – Protection of Human Health, the Environment and Worker Safety

The design, construction and operation of any project shall never compromise human health or the environment. For the water system, this includes provisions for safely treating, pumping, storing, and conveying potable water to all users of the County water system. For the wastewater system, this includes provisions for safely collecting, pumping, treating and discharging wastewater from all users of the sewer system without harm to human health or the environment. Additionally, the safety and well being of the personnel that operate and maintain the facilities shall be of paramount importance in the planning, design and construction of facilities.

Principle No. 2 – Ease of Maintenance, Durability and Longevity

All facilities shall be designed to require a minimal amount of maintenance once they are put into operation. The higher the maintenance, the greater the manpower required and the greater the costs to be passed onto the customers. All facilities shall be designed to withstand the structural, chemical, biological, hydraulic, electrical, and mechanical conditions for which the facility is expected to withstand for the life of the facility. Designs shall incorporate low maintenance materials and shall provide ample room to facilitate maintenance and accessibility to all components that require periodic maintenance or that are designed to allow replacement of components at some point during the useful life of the system. For pipes and pipe appurtenances, provisions shall be made for access, maintenance and repair.

Principle No. 3 – Efficiency

Harford County is committed to energy efficiency in the design and operation of our facilities. All facilities shall be designed to incorporate pump selections that operate as near the Best Efficiency Point as possible and to utilize motors manufactured to "Premium Efficiency" standards as determined by IEEE standards. Controls, drives, lighting and HVAC components shall be similarly selected. High efficiency systems result in reduced maintenance and operating costs.

Principle No. 4 – Reliability

All facilities shall be designed to provide reliable service and not prone to malfunction. Reliable systems do not violate Principle No. 1. Reliable systems with electrical equipment have redundant power supplies. Reliable systems are specified with materials and equipment with a sound historical performance. In general, reliability is established through the use of quality materials, components and equipment and through redundancies in critical mechanical equipment, controls, and electrical devices.

Principle No. 5 – Cost Effectiveness

All facilities shall be designed with the minimum cost to Harford County, while achieving all of the principles listed herein. All facilities shall result in the minimum maintenance and operational costs over the life of the facility as demonstrated by a lifecycle cost analysis as needed.

Principle No. 6 – Aesthetics and Good Neighbor Policies

The design, construction and operation of all water and sewer systems shall be aesthetically pleasing. All above-ground structures shall be designed with architectural styles and materials that compliment the surroundings and create a minimal presence in the community. Projects shall not result in odor complaints from the general public. Noise shall be mitigated at all times to achieve noise levels that are as close to ambient levels as practical. Site lighting shall be effective at illuminating the site and shall not create a nuisance to adjacent property owners or draw undue attention to the site. Landscaping shall be incorporated into the design to as applicable to assist in achieving this principle.

E. Waivers

If the Engineer for any reason finds it necessary or desirable to use procedures, standards or criteria other than those included herein, the Engineer must apply to the County for a waiver of the design requirements. A request for a waiver is to be addressed to the Deputy Director, Division of Water and Sewer and shall, at a minimum, contain a narrative indicating the design objective and the justification for the request. Approval or denial of the waiver request will be by return letter signed by the Deputy Director.

F. Jurisdiction

1. Incorporated Municipalities

   Any proposed water and sewer facilities within the incorporated limits of the Town of Bel Air, City of Havre de Grace and City of Aberdeen shall be submitted to, reviewed and approved by those municipalities and/or their private utility providers. However, if the planned development is proposed to be served by Harford County water and/or sewer, the Division of Water and Sewer must review and approve the construction drawings and record plat.

2. County

   The Harford County Department of Public Works, Division of Water and Sewer has the complete responsibility for the design, construction, operation and maintenance of public water and sewer systems within its political boundaries. The design and construction of public water and sewer systems outside of the incorporated town/city limits, within Harford County shall conform to the Harford County Water and Sewer Design Guidelines and Standard Specifications and Details for Water Mains and Sewer Mains.

   In addition to these design guidelines, any construction of water or sewer mains within the County road right-of-way shall also conform to the requirements of the Harford County Division of Engineering and Construction, Highway Engineering Section.

The design and construction of private water and sewer systems shall conform to the Harford County Plumbing Code, the Maryland Code of Regulations, and the Harford County Health Department.

The Engineer shall also be cognizant of the Harford County subdivision regulations and zoning code.

3. State and Federal

All construction plans and specifications for the extension or alteration of water and sewer systems within the State of Maryland are subject to the guidelines contained in the latest edition of the Maryland Department of the Environment's (formerly the Department of Health and Mental Hygiene) Design Guidelines for Sewerage Facilities. Other State and Federal agencies exercising control over water and sewer projects with respect to locating and siting of facilities include, but are not limited to, the U.S. Army Corps of Engineers, Maryland Department of Natural Resources, Soil Conservation Service (through the Harford Soil Conservation District) and Federal and State Highway Administrations. Control is exercised when the project will impact the environment or will occupy their facilities or areas of jurisdiction. If a conflict arises between these design guidelines with State and Federal guidelines, these guidelines shall govern. Where specific guidelines are not provided herein, guidance shall be obtained from applicable industry standards including but not limited to 10-State Standards, American Water Works Association and Manufacturer recommendations.

1.2 Abbreviations

Whenever in this chapter or other chapters, the following abbreviations are used, they will represent:

AASHTO	American Assoc. of State Highway and Transportation Officials
ACI	American Concrete Institute
ACP	Asbestos Cement Pipe
AISC	American Institute of Steel Construction
ANSI	American National Standards Institute
APF	Adequate Public Facility
ASTM	American Society for Testing and Materials
ATS	Automatic Transfer Switch
BGE	Baltimore Gas and Electric Company
CAD	Computer-aided Drafting
CIP	Cast Iron Pipe
COMAR	Code of Maryland Regulations
DHC	Drop House Connection
DIP	Ductile Iron Pipe
FH	Fire Hydrant
GIS	Geographic Information System
GPAD	Gallons Per Acre Per Day
GPCD	Gallons Per Capita Per Day
GPM	Gallons Per Minute

HDD	Horizontal Directional Drilling
HDPE	High Density Polyethylene
HS-20, H-20	Truck Loading Designations
LPSS	Low Pressure Sewer System
MCC	Motor Control Center
MDE	Maryland Department of the Environment
MGD	Million Gallons per Day
MOSH	Maryland Occupational Safety and Health
NAD	North American Datum
NAVD	North American Vertical Datum
NSF	National Sanitation Foundation
NFPA	National Fire Protection Association
NPSHR	Net Positive Suction Head Required
OSHA	Occupational Safety and Health Administration
PCCP	Pre-stressed Concrete Cylinder Pipe
PLC	Programmable Logic Controller
PRV	Pressure Reducing Valve
PSI	Pounds Per Square Inch
PVC	Polyvinyl Chloride
PWUA	Public Works Utility Agreement
RCP	Reinforced Concrete Pipe
RPM	Revolutions Per Minute
RTU	Remote Telemetry Unit
SCADA	Supervisory Control and Data Acquisition
SDR	Standard Dimension Ratio
SHA	State Highway Administration
SHC	Sewer House Connection
VCP	Vitrified Clay Pipe
VFD	Variable Frequency Drive
WHC	Water House Connection
WTP	Water Treatment Plant
WWTP	Waste Water Treatment Plant

1.3 Definitions

Engineer: A professional engineer, registered in the State of Maryland, who is responsible for the design of the project.

Developer: An individual or company which subdivides property and extends public water or sewer facilities to the subdivision and/or an individual or company which makes improvements to a property requiring public water or sewer facilities.

Division of Water and Sewer: The Harford County Division of Water and Sewer, under the Department of Public Works, a department of Harford County Government.

Health Department: Harford County Health Department.

Master Plan: The latest approved version of the “Harford County Master Plan for Water and Sewerage”.

Standard Specifications, or Standard Details: Harford County, Division of Water and Sewer "Standard Specifications and Details for Water Mains and Sewer Mains".

1.4 Projects Defined

Water and sewer projects for Harford County are divided into two basic categories: Developer Projects and Capital Projects.

A. Developer Projects

A Developer Project arises whenever a land developer engages in the subdivision of land or the development of a parcel of land, either of which fall under the requirements of the Harford County, Department of Planning and Zoning Development Regulations.

B. Capital Projects

A Capital Project may arise by any of several administrative means. The common identifying feature distinguishing a Capital Project from a Developer Project is that funds for implementation of the Capital Project are allocated through the regular budgetary processes with Harford County. Capital Projects may involve the installation of major elements of the water or sewer system such as water supply, transmission or storage facilities, interceptors or treatment facilities.

1.5 Water and Sewer System Description

A. General

Public water and sewer service is restricted to those properties located within the water and sewer service areas. These service areas are established by the Harford County Code through adoption of the Master Water and Sewer Plan. Enlargement of the water and sewer service areas may be considered in accordance with the requirements set forth in the Master Water and Sewer Plan.

B. Water System

The County water system consists of a network of distribution mains, storage facilities, booster pumping stations and treatment plants. All of these facilities are designed to provide a hydraulically balanced system to accommodate fluctuations in consumer demands and to provide adequate flow rates for combating fires in combination with other system requirements. Water supplied to consumers is metered at the point of use. The County has developed a central monitoring system using telemetry to continuously monitor the operational condition of the system and to permit quick response under emergency conditions. Harford County assumes full responsibility for the operation and maintenance of its water system.

The Division of Water and Sewer maintains a series of maps showing the location and size of both existing and planned elements of its water system. Because of the topographic relief of the County, the water system is divided into pressure zones in order to provide an acceptable range of operating pressures to the customers. The location of the pressure zones are also shown on various maps maintained by the Division of Water and Sewer. Pressure gradient elevations have been determined for both the existing network and planned extensions and are identified by the minimum and maximum pressures available in terms of elevations above mean sea level and their limits have been defined on the basis of ground elevations. These ground elevations are presented in Chapter 3. Additional Information on the water system may be found in the Master Water and Sewer Plan.

C. Sewer System

The public sewer system serving Harford County is similar in extent and complexity to the water system. The system for collection and transport of wastewater has generally followed the patterns of growth of the potable water system, with a time lag due to the increased economic burden inherent in this type of system. There is a system of interceptor sewers installed or planned in all of the major natural drainage basins.

Sewer pipelines involving the collection and movement of wastewater from its point of origin to its point of treatment and disposal are categorized by two descriptive terms relating to the function performed. The two categories are collector and interceptor.

Collector Sewers

A collector sewer, minimum 8 inches in diameter and installed in a street, is the portion of the system which is installed adjacent to an individual property or groups of properties to provide a direct connection or service to abutting properties. A collector sewer is a public main designed to serve one or more customers.

Interceptor Sewers

Interceptor sewers are major pipelines following the major drainage courses, within Harford County, accepting flows from collectors and conveying them to the point of disposal. Collector sewers are directly connected to the interceptors. Interceptors seldom accept individual service connections. An interceptor by definition is a sewer 24-inches in diameter and larger, that transports wastewater from a collection system to a wastewater treatment facility, a major pumping station or to another interceptor and not to another collection system.

Pumping Stations and Force Mains

Pumping stations and force mains, when employed in approved permanent locations, facilitate servicing areas not normally serviceable by gravity sewers, and also serve as collection points for multiple drainage areas to transport wastewater to major interceptors.

Treatment Facilities

The Sod Run WWTP and the Joppatowne WWTP receive flow from the major interceptors and pumping stations.

As with the water system, the Division of Water and Sewer maintains a series of maps showing both the size and extent of existing and planned wastewater facilities.

As a policy, the Harford County wastewater system is intended to collect, transport and dispose of wastewater associated with human habitation of residential or employments units. The wastewater system is reserved for these types of wastes only. Under no circumstances are storm water flows permitted to be introduced into the wastewater system. Industrial wastes resulting from manufacturing or processing operations are not always accepted into the system and must be handled by the originator in accordance with the Harford County Code and all other applicable laws and regulations.

Additional information on the sewer system may be found in the Master Water and Sewer Plan.

D. Water and Sewer Charges

Charges for water and sewer services shall be in accordance with the General Rules and Regulations.

1.6 Project Development

As previously indicated, water and sewer projects fall into two categories: Developer Projects and Capital Projects. How these projects arise and the requirements associated with each are briefly outlined below.

A. Developer Projects

When a Developer is to extend public water and/or sewer service to a property, or simply install a water and/or sewer service, the Developer must show the proposed method of service on the Preliminary Plan or Site Plan as submitted to the Department of Planning and Zoning.

The Engineer shall first verify that there are adequate water and sewer facilities for the proposed development before preparing the Preliminary or Site Plan. Adequacy of the existing facilities shall be determined utilizing the data provided in the Annual APF Report in accordance with the provisions of the APF portion of the County Code. The Engineer shall verify that the proposed development meets the adequacy standards. The Engineer's computations will be reviewed by the Division of Water and Sewer. If the Engineer does not submit the above computations, or if the Engineer submits the computations and the Division of Water and Sewer determines inadequate capacity, the Developer may appeal to the Director of Public Works for an opportunity to perform an independent study. If an independent study shows that the capacity is adequate and the Division of Water and Sewer and Director of Public Works concurs with the methods and conclusions presented in the study, then the capacity may be considered adequate for development.

The Developer shall also ensure that the proposed development is in conformance with the Master Water and Sewer Plan.

When a tract of land is subdivided, all of the lots within the subdivision as well as the remaining lands of the original tract shall be provided with both water and sewer service in a layout that shall be approved by the Division of Water and Sewer. In the event that some or all of the property is sold to another party, the owner at the time of construction is responsible for constructing all of the water and sewer mains on his tract of land including those shown to serve adjacent properties. The timing of the construction of the utilities will be required in accordance with the executed PWUA.

All improvements to collector sewers, interceptor sewers, wastewater pumping stations, force mains, and treatment facilities required to convey and treat wastewater from the development must be operational prior to any units from that development connecting to the public sewer system. Likewise, all necessary improvements to the water system must also be operational prior to any units from that development connecting to the public water system.

B. Capital Projects

Capital Projects may begin in several ways. Residents may petition the County to undertake projects or to advance projects previously contemplated. Petitions for water or sewer service are in accordance with Part 24 of the General Rules and Regulations. The Division of Water and Sewer may originate projects to alleviate existing or projected problems in the overall operation of the systems. The County Council may request of the County Executive to create a Capital Project. Regardless of who or what the originating cause is for a Capital Project, the County Executive is charged with the responsibility of annually preparing a budget of Capital Projects for adoption by the County Council.

As required by County Charter, public hearings are held prior to action by the County Council. This is done for the purpose of reviewing the proposed budget items, publicly displaying all proposals for Capital Projects and receiving relevant citizen comments.

The Division of Water and Sewer accomplishes most of the preliminary work associated with the identification of Capital Projects. However, after the adoption and funding of Capital Projects are approved, it is normal practice for the County to engage the services of consulting engineers (Engineers) to provide the detailed engineering for water and sewer projects. Selection of an Engineer is made in accordance with County Procurement regulations and policies.

Contracts with Engineers on water and sewer projects will stipulate the scope of work, schedule to be followed and arrangements and other details normally associated with contractual procedures. Changes in the Engineers scope of work will be through a change order to the engineering agreement. Unless otherwise accepted by contract, the Engineer for Capital Projects will advance a project in the same general manner as described for Developer Projects. All submissions of reports, plans and specifications shall be made directly to the Division of Water and Sewer Project Manager.

When engaged in a Capital Project, the Engineer's point of contact is with the Division of Water and Sewer. The Division of Water and Sewer will designate a Project Manager from its staff who will assume responsibility for developing a scope of work, procuring the consultant services, monitoring the project, coordinating details and reviewing reports, plans, specifications, coordinating the bid and award process and management of the construction phase.

1.7 Approval of Plans and Specifications

A. Plans

1. Developer Projects

   a. Construction drawings will be accepted for review only after the Concept and Preliminary Plan Approval letter has been fully executed and a Letter of Intent has been signed by the Owner.

   b. Generally, there shall be two reviews. The Engineer shall submit four sets of paper prints for the preliminary review. The preliminary review submittal shall consist of 100% complete plans. If, in the opinion of the Division of Water and Sewer, the plans are not 100% complete and lack vital information, the plans will be returned to the Engineer. Four sets of prints of the preliminary review submittal shall be submitted to the Division of Water and Sewer. After the Engineer has addressed all of the comments from the

preliminary review, 2 sets of paper prints along with the preliminary review mark-ups and mylars shall be submitted for the final review and approval. After the construction drawings have been fully signed by all County agencies, five (5) sets of prints and the original mylars shall be submitted to the Division of Water and Sewer. A pre-construction meeting may not occur until the above plans and mylars have been submitted.

c. Water and sewer construction drawings will also be reviewed by the offices of Traffic Control and Sediment and Erosion Control. Approval of the construction drawings will be granted only after these agencies provide authorization for Water and Sewer approval.

d. Water and Sewer construction drawing approvals are valid for one year from the last County signature date. If the installation of utilities does not begin within the above one-year period, the Division of Water and Sewer requires the construction drawings be re-submitted for review and approval. The Engineer shall submit one set of prints for review and comment. Once the plans have been updated to current standards, approval will be noted by County signature in the revision block.

e. For sewage pumping stations, low pressure sewer and water booster stations, seven (7) sets of prints shall be submitted in accordance with the procedures in paragraph “b” above. Six (6) sets of specifications shall be submitted for sewage pump stations and water booster stations.

2. Capital Projects

a. The contract drawing submittal process for capital projects and review schedule shall be in accordance with the County scope of services and project schedule.

B. Specifications

Specifications for both Developer (if required) and capital projects shall be submitted at the time of construction drawing submittal or as otherwise specified in the County scope of services.

Specifications shall reference the Harford County Standard Specifications and Details for Water Mains and Sewer Mains, and modify them as necessary for each individual project. Projects with work that is not covered in the Standard Specifications shall have technical specifications developed for the work.

Developer projects which require specifications include but are not limited to sewage pumping stations, water booster stations, and water tanks.

C. Other Documents

1. Developer Projects

a. Executed Public Works Utility Agreement

A Public Works Utility Agreement (PWUA) between Harford County and the Developer must be executed for the proposed development before construction may occur. The PWUA may not be executed until the contract drawings have been approved and all easement documents have been recorded.

b. Record Plats for Proposed Subdivisions

Approval of the record plats will be considered after the Division of Water and Sewer has approved the construction drawings.

c. Drainage and Utility Easement Documents

The preliminary review submittal shall include three (3) copies of any necessary off-site drainage and utility easement plats and accompanying deeds. In no case shall the final construction drawings (mylars and two(2) sets of prints) be submitted without the above easement documents. If the easement documents are not submitted, the mylars and prints will not be reviewed and will be returned to the Engineer. Construction drawings will not be approved by the Division of Water and Sewer until all of the necessary off-site easement documents have been reviewed and approved by all applicable County agencies and recorded in the County Courthouse.

1.8 Engineering Evaluations

The requirement for an engineering evaluation is applicable to Developer and Capital Projects alike whenever water or sewer system extensions or improvements are being considered for construction. The evaluation and subsequent report shall be prepared by a professional engineer, experienced in water and sewer systems, who is licensed to perform such services in the State of Maryland. Refer to Chapter 2 for engineering evaluation requirements.

1.9 Preparation of Construction Drawings

A. General

Contract documents for construction projects in Harford County are commonly comprised of construction drawings and the construction specifications. Taken together, these documents form the basis for the construction contract between the owner and contractor. Contract documents are prepared by the Engineer, who is responsible for a complete description of all work to be performed, in accordance with the Standard Specifications. The Engineer remains responsible for adequately designing, detailing, and specifying through the Special Conditions and the Technical Specifications, all contract-specific materials and methods of construction not described in the Standard Specifications.

B. Purpose

1. The primary purpose of construction drawings is to show the size, horizontal and vertical location and type of materials and structures to be installed as part of a water or sewer system. The construction drawings must be developed in sufficient detail to depict the improvements and their spatial relationship with both existing conditions and planned future improvements.

2. This section sets forth requirements for information to be placed on construction drawings. When completed according to County standards and properly implemented in construction, the original drawings for water and sewer facilities form a permanent record of the completed work and the materials employed on the project. When modified with as-built notations, the drawings provide a comprehensive and accurate statement as to where the facilities are located, the materials used and their relationship to other important improvements.

3. In order for the Division of Water and Sewer to provide necessary maintenance activities, including emergency repairs, etc., it is necessary that the drawings are clearly drawn, can be accurately scaled and show all information necessary to be included as a permanent record. In addition, water and sewer drawings are utilized in many other record-keeping activities by the County that requires standardized accurate information. One of the most common uses of record drawings, other than for repair information, is for computer remodeling portions of the system. In these cases, the record drawings may be used for the re-evaluation of design capacities in the light of changed conditions after the original project was completed.

4. Construction drawings shall clearly designate the limit of Harford County ownership and maintenance.

C. Miscellaneous Information

1. For Developer Projects, contract numbers shall be assigned by the Division of Water and Sewer upon receipt of the first submission of construction drawings. The water contract number shall appear first with the sewer contract number second.

2. The construction drawings shall be submitted for review and approval in the order which the phases or sections were identified in the approved preliminary plan. Each set of construction drawings shall only include one section or phase. A phase or section may be broken down into smaller divisions for construction and operational inspection purposes. The exact location of the operational breaks must be approved by the Division of Water and Sewer and shall be shown with a bold line. The location of the operational breaks may not be revised after the drawings have been approved and after construction has begun.

3. If an operational break has been authorized by the Division of Water and Sewer, it shall be identified on the construction drawings. Operational breaks shall include a minimum of twenty five (25) single family and townhouse units. Development of operational breaks for garden-type condominium units shall consider the configuration of roadways.

4. If a Developer project requires the design and construction of a sewage pumping station, then both the sewage pumping station and force main shall be on the same set of construction drawings separate from the other water and sewer construction drawings for the development. A separate sewer contract number will be assigned by the Division of Water and Sewer for the sewage pumping station project.

5. Drawings for water and sewer utilities shall be presented on sheets separate from the design of other utilities.

D. Drafting and Graphic Standards

1. Sheet Size, Borders and Materials

   All water and sewer construction projects shall be prepared on 24” x 36” Mylar drafting film (minimum thickness 0.004 inches, matted both sides). Borders shall be ½-inch on all sides with the exception of the left side, which shall be 1 ¾ inches, with standard title block. All drafting and lettering shall be performed directly on the original plans and no reproductions, rub-on or adhesive materials shall be used, unless otherwise authorized.

2. Drawing Format

Harford County has a standard format for title sheets and plan and profile sheets. Both capital and developer projects shall utilize this format. Electronic file copies of these formats are available upon request at the Division of Water and Sewer.

3. Computer-aided Drafting (CAD)

All requirements of this section, "Drafting and Graphic Standards," shall be met. Plotters used for CAD shall be equipped with technical ballpoint pens, standard drafting pens or an electronic printer device (ie. Laserjet). In no case shall the ink plot be able to be rubbed off by hand. The ink shall adhere to the mylar to the degree in which a mechanical eraser is required to remove the ink. Hand drafting may be used on any project if the Engineer so desires. Free-hand lettering will be allowed if it is legible.

4. Scale

Water and sewer drawings in plan view shall be drawn on a scale of 1" = 50' or 1" = 30'. Water and sewer profiles are typically drawn to accompany the plan layout and shall be shown below the applicable plan layout on each sheet. For Developer Projects, the complete layout of the piping system may be shown in the plan view drawing. Profiles shall then be shown on a separate sheet and cross-referenced to the appropriate plan. Profiles shall be drawn to a horizontal scale of 1" = 50' and a vertical scale of 1" = 5'.

The scale to be used for details on any set of drawings shall be ¼", ½", 1", 3/8", or 1 ½" = 1'-0".

5. Use of Standard Symbols and Abbreviations

The Standard Symbols shown on Plate G-1 of the Standard Specifications shall be used wherever possible. Non-standard symbols and abbreviations deemed necessary shall be clearly defined in a legend on the title sheet or for a project involving multiple disciplines, such as mechanical, electrical, structural and architectural, on the first sheet of each discipline in which they are used. If symbols fail to convey the required information clearly, they shall not be used.

6. Lettering

Vertical lettering shall be used throughout. Lettering shall be uniform, neat in appearance, free of stylization and large enough to be read when reduced for County use. Lettering for titles, sub-titles and notes placed on the drawings shall be the size approved by the Division of Water and Sewer. All notes, descriptions, etc.

shall be minimum of No. 4 (4/32-inch) in size and shall be either all upper case or all lower case. Proper names only shall be capitalized. Construction notes shall not be placed in shaded areas. Crowding of notes into a small space shall be avoided. Leaders shall be used to identify the object to which each note refers. A leader shall not cross another leader. All lettering in the same contract shall be of the same style.

7. Title Sheet

a. The first sheet of all projects shall include a 1" = 600' scale location map with sufficient road names and other features to allow easy recognition of the site. When a set of construction drawings contain only one sheet, the location map shall be placed at the upper right portion of the first plan sheet.

b. The location map shall, in addition to the above, show the location, and size of adjacent existing water and sewer facilities, proposed water and sewer mains, pumping facilities, and manholes.

c. In addition to the location map, the title sheet shall show the contract title, contract number(s) and capital project number (if applicable). The title sheet shall also include a bill of materials tabulation with columns for bid quantity, as-built quantity and material/supplier. The contract quantities for lengths of water and sewer main, broken down by type of pipe material, and related appurtenances shall be included in the Bill of Materials. For projects with two operational breaks, the quantities shall be organized by operational break. If a project has 3 or more operational breaks, a separate Bill of Materials shall be provided for each break.

d. For Developer Projects, the Developer/Owner name, address and telephone number shall be shown on the title sheet of each contract.

e. Benchmark information shall be shown in the general notes on the title sheet. All contracts shall include benchmark and traverse point data. Every contract shall reference at least one Harford County benchmark. Information on the most current benchmark data can be obtained from the Division of Water and Sewer or the County Surveyor. Horizontal reference shall be based on the NAD 83 datum. Vertical reference shall be based on the NGVD 1929 datum. If a design connects proposed water and/or sewer utilities to existing utilities which were designed in a different coordinate system, then the location

of existing utilities shall be converted in the above coordinate system.

f. If the proposed project does not require a separate sediment and erosion control plan sheet, the Developer and Engineer certifications shall be provided on the title sheet.

g. General Notes

The title sheet shall include general notes. At a minimum, the General Notes included in the Chapter 1 Appendix shall be included.

8. Information Required on Plan and Profile Sheets

a. General

The purpose of the construction drawings is to portray graphically to the review agencies, project engineer and contractor the nature and extent of the proposed work and the conditions under which the work is to be performed. All information that can best be shown by plans and their accompanying dimensions and notes should be shown on the contract plans or appropriate reference to the County's Standard Details made where applicable. In general, Standard Details shall not be copied on the plans, but references shall be indicated on the plan and profile.

b. Title Block

Each sheet shall have a title block in the lower right of the sheet. The title block shall show the project name, sheet title, contract number, scale, date, sheet number, signature blocks and revisions blocks. The title block on each sheet shall also include the Engineer's name, address and telephone number. Sheets shall be numbered sequentially 1 through X, where X is the total number of sheets in the contract.

c. Seal and Signature

The professional engineer's seal, original signature and registration number belonging to the Engineer responsible for the design, registered in the State of Maryland, shall be shown on the title block of the title sheet and each subsequent sheet of the set of plans. The date on which seal and signature were affixed to the plans shall be shown in the same location on all the sheets.

The Engineer's seal, signature, registration number and date of signature shall also be shown on the first page of the project specifications for capital projects.

d. Traverse Points

For Capital Projects, traverse point recovery diagrams (ie "cookies") with dimensions shall be shown for each traverse point on the sheet where the traverse point occurs. Traverse referencing shall be made to permanently fixed objects that will not be disturbed during construction of the proposed project or other projects. Wherever possible, permanently fixed objects used to locate traverse points shall appear on the plan. Traverse points shall be clearly identified and coordinates of each point shall be either shown at the traverse point in a neat manner, or in tabulation form, on each plan sheet for which the traverse points occur. Bearings and distances between traverse points shall be shown.

e. North Arrow and Grid Ticks

Each plan sheet and location map shall have a north arrow. Plan sheets shall be oriented so that the north arrow points toward the top or toward the right side of the sheet, or toward the upper right quadrant of the sheet. In general, the north arrow shall point no less than 10 degrees from horizontal and never below horizontal.

Each plan sheet shall show a minimum of four coordinated grid ticks based on the Maryland State Plane Coordinate System and all bearings shall be related to grid north. Two of these grid ticks shall be on the same N-S or E-W line, forming a right angle arrangement. The coordinated grid ticks shall be at multiples of 250 feet.

f. Contract Limits

The limits of the contract shall be clearly shown on all plans.

g. Match Lines and Cross-references

All plans in the same contract shall be cross-referenced by ascending numbers. Match lines with a minimum length of 4 inches shall be used wherever the plan is to be continued on the same or another sheet. Data shall be cut off at the match line; duplication of data on matching sheets is not permitted.

h. ADC Map Reference

All plan sheets shall include the Harford County ADC map page, grid number, grid lines, and date of map when they fall within the plan view.

i. Profile Layout

The profile shall be oriented in the same direction as the plan view.

j. Additional Information

Additional information shall be shown on the plan and profile sheets in accordance with Chapter 5, Section 5.2.B.

9. Sediment and Erosion Control Sheets

a. Approval and Certificate Blocks

Sediment and erosion control plan sheets shall contain Developer's and Engineer's certifications. The Engineer shall contact the Harford Soil Conservation District for current certification blocks.

b. For developer projects which require a grading plan, the sediment and erosion control sheets shall not be included with the water/sewer contract. All water and sewer construction projects that require sediment control shall have detail sheets with required notes dedicated exclusively to sediment control. Existing and proposed contour lines shall be shown on the erosion and sediment control plans in accordance with the requirements of the Harford Soil Conservation District. Contours shall be displayed as required on separate erosion and sediment control plans. All sediment and erosion control plans and specifications are reviewed and approved by the Harford County Department of Public Works and Harford Soil Conservation District.

10. Traffic Control Plan

If a proposed utility is to be constructed within an existing Harford County road right-of-way, then a traffic control plan shall be included in the water and sewer contract plans and a utility permit shall be obtained from the appropriate agency. For capital projects, if the proposed utility is within a State Highway right-of-way, the traffic control plan shall also be included on the plans.

E. Standards for Depicting Existing Conditions

All construction plans shall be drawn to scale and must clearly and completely depict all existing topography and man-made features. In order to develop the required information to scale, the Engineer is required to conduct field surveys to accurately establish horizontal and vertical control points along the route of the project based on the Maryland State plane coordinate system.

Construction drawings based on aerial photogrammetry may not be used for the preparation of construction plans, unless sufficient field work is done to make any necessary adjustments to obtain satisfactory accuracy in both horizontal and vertical planes. Construction drawings based on the Harford County Geographical Information System (GIS) is strictly prohibited.

As previously indicated, existing natural and man-made topographical features as developed through field survey activities are drawn onto the construction plans using standard notes, symbols and established drafting techniques to present a clear representation of the area.

In surveying, plotting and drafting of existing features onto the construction plans, the inclusion or elimination of information must be carefully evaluated in the interest of efficiency of work, clarification of plans and sufficiency of representative information. A complete listing of required survey and as-built information to be included on the base plans is given in Section 5.3, “Topographic Surveys” of this manual. On projects requiring more detailed information, it is the responsibility of the Engineer to recognize the extent and detail of information necessary to show a complete picture of the project area. However, in no case shall the Engineer show less than the requirements listed in Chapter 5.

Plan sheets for developer projects do not need to show the information required in Section 5.3 “Topographic Surveys” for proposed water and utilities <u>within</u> the proposed subdivision road right-of-way only. All other areas and all other projects shall show the topographic features referenced above.

Unless otherwise noted in the Engineer’s scope of services with Harford County, the limit depicting the above topographic features shall be a minimum of 10-feet beyond each side of the easement or road right-of-way.

1.10 Preparation of Construction Specifications

A. General

1.a. In general, developer projects shall be built in accordance with the Standard Specifications and project specifications are not necessary. Project specifications for developer projects with non-standard work will be necessary. Depending on the complexity and length of non-standard specifications, the Division of Water and Sewer will require either the specifications be included on the contract drawings or within a separate project manual.

b. Harford County Division of Water and Sewer Standard Specifications and Details are set forth in Part 26 of the General Rules and Regulations. Specifications, special conditions, bid form, contract and bond forms and other designated items, when required by the County, shall be developed by the Engineer specifically for each project and shall be published in booklet form. A draft of the project specifications shall be submitted with each plan submittal for review by the County. These requirements apply to both Developer Projects and Capital Projects.

2. Upon completion of the construction plans for water and sewer projects, the Engineer is required to provide any required specifications to accompany the plans. At this stage of the project, the Engineer shall finalize the non-standard portions of the specification with the possible exception of items relating to permits. When all details of the specifications are completed, the Engineer shall submit three completed copies of the non-standard portions of the specifications for Developer Projects and the stipulated number of copies of the complete and bound specifications for Capital Projects. The final specification shall have the Engineer's Professional Engineer's seal, signature and date of signature on the title page.

B. Specification Format

The Standard Specification format is to be used as a guide in the preparation of the non-standard portions of the specifications.

C. Standardized Specification Sections

For Capital Projects, the Division of Water and Sewer has standardized on the Invitation for Bids, Information for Bidders, Bonds, General Conditions and Bid Form. The Division of Water and Sewer Project Manager will provide electronic versions of these documents to the Engineer.

D. Sewage Pumping Stations, Water Booster Stations, Water Storage Tanks, Treatment Facilities

In all cases, for Developer and Capital projects, specifications in booklet form will be required for sewage pumping stations, water booster stations, water storage tanks and treatment facilities.

1.11 Construction Drawing Revisions

A. General

1. Any revisions that do not conform to the approved Preliminary Plan may not be approved until the Preliminary Plan has been revised and approved or a waiver has been issued by the Department of Planning and Zoning.

2. All changes to the approved drawings caused by a change to the original design will require revised construction drawings. These revisions shall be reviewed and approved by the Division of Water and Sewer.

3. Generally, the addition to or extensions of existing water and sewer utilities shall not be added to previously approved contract drawings. A new set of contract drawings will be required for this work.

4. If an Engineer or Contractor chooses to change the water main material from PVC to DIP or from DIP to PVC, a revision to the contract drawings will be required.

B. Method of Revision

The method of revising construction drawings is dependent on the status of the approval process.

1. If a drawing has not yet been signed by the Deputy Director of Water and Sewer, then the drawing may be revised either by hand in ink or electronically by CADD.

2. Once the Deputy Director of Water and Sewer signs the drawings all changes shall be made by hand in ink.

3. Substantial changes which affect the majority of the drawing shall be revised electronically. It shall be noted that any changes made electronically may require re-routing of the mylars for signature which may increase the approval time. If an existing drawing is revised electronically, in no case shall the original signatures be scanned and re-printed.

C. Revision Process

1. All revisions to approved contract drawings proposed by either the Contractor or Engineer shall be prepared by the Engineer and approved by the Division of Water and Sewer.

2. The Engineer shall submit one set of red-lined drawings to the Division of Water and Sewer for review and comment. All sheets affected by the proposed revision shall be included in the sheets submitted for approval.

3. The second submittal shall include the proposed revisions shown on the mylars, drawn by hand in black ink, with the appropriate revision block information for the Division of Water and Sewer approval.

.

4. Subsequent to the Division of Water and Sewer approval five (5) sets of paper prints shall be returned for distribution.

D. Revision Format

1. The title block shall include a section dedicated to drawing revisions and include the following information:

   a. "DATE" – Date revision is performed with the corresponding revision number denoted within a triangle.

   b. "REVISION" – Provide a brief description of the revision.

   c. "BY" – Provide the initials of the person preparing the change. The company name or initials of the company shall not be included.

2. All changes shall be referenced with a number designation within a triangle in plan and profile. The same numbered triangle shall also appear next to each corresponding revision block.

3. The first series of the revision on a given sheet is 1, the next series of changes will be 2, etc.

1.12 <u>Addition of New Sheets to Previously Approved Construction Drawings</u>

A. General

The following pertains to the addition of new drawings to a contract that has previously been approved by the Deputy Director of Water and Sewer.

1. If a proposed revision requires the addition of a new drawing, it will be added to the end of the existing set of drawings.

2. When a new sheet is added, the numbering scheme of all existing sheets shall be revised in addition to drawing cross-references. Adding a suffix to an existing sheet number is prohibited.

3. If an existing drawing is being completely revised, the existing sheet shall be replaced with an approved revised sheet.

4. The new drawing(s) must meet all current design standards and requirements.

5. All additions of new sheets shall be approved by the Division of Water and Sewer.

1.13 Record Drawings

A. General

It is extremely important that water and sewer plans accurately reflect as-built conditions upon completion of construction. The as-built information is used for future planning purposes, Miss Utility locating, the construction of future utility extensions, to verify the as-built conditions will not lead to future maintenance concerns, to verify adequate system capacity and to obtain electronic data to supplement the Harford County Geographic Information Systems. As-built surveys are required of both Developer and Capital Projects.

With the coming of the digital age and the benefits of exchanging digital information between field and office equipment, the Division of Water and Sewer has recognized the efficiencies and quality of digitally-produced as-built drawings and has updated the as-built drawing requirements accordingly.

B. Procedures

For Developer Projects, after construction is completed and the operational certificate has been signed by the appropriate County field personnel and has been forwarded to the Division of Water and Sewer Engineering Section, the Engineer shall submit one set of prints for review and approval. Once all comments have been addressed and the prints have been approved, the Engineer shall submit the as-built mylars and two sets of prints. For Capital Projects, the Division of Water and Sewer Project Manager will notify and request the Engineer to perform the as-built survey after the project has been tested and accepted. The submittals shall follow the procedures noted above for Developer projects.

C. Requirements

The following presents the as-built survey requirements, information to be included on the contract drawings, format of how the as-built changes are presented, certifications, and digital data submission.

1. As-Built Survey

The Engineer shall field locate by survey, using the horizontal and vertical controls for the utility stakeout, all valves, hydrants, curb stops, cap and blows, meter vaults, manholes with incoming and outgoing invert elevations, lampholes, cleanouts, and any other water and sewer appurtenances that were installed as part of the contract.

2. Information Shown on Drawings

All as-built information shall be shown in red ink. The as-built drawings shall also reflect any horizontal and vertical changes to the plan and profile of the utility. The Engineer shall re-draw horizontal and vertical locations of all utilities and appurtenances greater than the tolerance of two (2) feet horizontal and 0.5 feet vertical based on the as-built survey. The Engineer shall also incorporate any County inspector notes which document changes in location of the utilities. The inspector's as-built drawings and material supplier's list must be submitted along with the topo worksheets along with the first as-built drawing submittal. The following shall also be performed prior to submitting the as-built drawings: Fill out as-built stamp with engineering firm initials, date work was completed, and name of actual county inspector; update the bill of materials including quantities, manufacturer's, and type of materials; Fill out the metallic line stamp information; revise all sewer slopes; revise all distances; update all inverts, top elevations, ground elevations, and FH bury elevations; add spot elevations on the ground next to manholes not in pavement; add addresses to all lots with services; Update all manhole coordinates in NAD 83; and identify the current property owner.

Every sheet shall include: "As-built Reviewed By_____", in the upper right hand corner of the drawing.

3. As-Built Format

The as-built drawings shall consist of a direct CADD plot showing the original design presented in black ink and the as-built changes presented in red ink. The signature blocks shall include the initials of the County staff who originally signed the drawings as well as the dates of those signatures. As an example, the format shall be: S/DWI 10/25/04.

The original signatures may not be scanned or otherwise copied and reproduced on the as-built drawings.

4. Certifications

The as-built drawings shall contain two certifications, one for the as-built certification and one for the digital drawing reproduction. The certifications shall be sealed by either a Professional Engineer or registered Land Surveyor licensed in the State of Maryland.

a. The Engineer shall place the "as-built certification" statement on the first sheet and sign and seal to attest to the statement. The as-built statement shall be:

"I hereby certify that the "as-built" drawings correctly show the horizontal and vertical location of the water and sewer utilities and associated appurtenances. Certify means to state or declare a professional opinion based upon on-site field inspections and surveys which were conducted after the water and sewer utilities were constructed. Certify does not mean or imply a guarantee by the Engineer or Surveyor, nor does this certification relieve any other party from meeting the requirements imposed by the contract, employment, or other means."

The certification shall include the survey date, signature, license number, seal, and signature date.

b. The Engineer of record shall place the following certification on the first sheet:

"I hereby certify that any and all as-built information is shown in red and the original design, which is shown in black, has not changed from the originally approved set of contract drawings."

The Engineer's professional engineer seal shall be stamped below the certification with signature and date.

5. Digital Data Submission

The following shall be submitted along with submission of mylars:

a. A complete set of CADD drawings in .dxf format using the development name (ie, Earlewood_Phase 5.dxf). This file shall include all layers and graphic elements included in the submitted paper document (geography, test, legend, scale, labels, etc.). A list of all CADD layers shall also be submitted (ASCII text file labeled:'subdivisionname_phasesXX_xlyrspec.txt'). All CADD layers shall be consistent throughout the Engineer's organization. The completed CAD drawing file shall

contain text in standard fonts that can be read without third-party software.

b. A metadata text file containing information on all CADD layers shall be submitted. This file shall include submittal information as well as technical parameters that may be necessary to review if problems in data conversion occur. The ASCII text file will be named using the following convention: (subdivisionname_phasesXX_meta.txt).

c. An ASCII text file containing elevation points. When submitting plans that include surveyed ground surfaces, a separate ASCII text file containing all elevation points shall be delivered. This file shall be named using the following convention: (subdivisionname_phasesXX_elev.txt).

d. Submissions shall be on CD-ROM. The submitted media shall be labeled with the title of the drawing (drawing file name), project contact information (name, affiliation, phone number, etc.), and a submittal and file creation date.

e. No polylines or annotation shall be stored in blocks. Explode all blocks that do exist. (Block references migrate to GIS as a single point at the block's insertion point.).

f. All points shall be stored as "POINT" or "BLOCK REFERENCE" (can't be softdesk point or aecc_point or any other feature type).

g. All layers shall be made visible prior to submission – all other layers can be turned off.

h. Closure is critical in converting CAD elements to GIS features. If appropriate (ie. Parcel boundaries, subdivision boundary, buildings), all polygonal features shall be 'snapped' closed.

i. Submitted .dxf files shall contain only complete parcel polygon features. All partial polygons (parcel boundaries) shown for reference in drawings are not to be included in the CADD layer.

j. All elevation points shall be delivered in a single comma-delimited ASCII text file. Each line of the file shall contain values (in MSP coordinates) for a single point as follows:

Easting, Northing, Elevation, Code
675324.81, 1456424.30, 447.52, MANHOLE
675400.96, 1456321.06, 447.49, WATER VALVE
675333.76, 1456435.25, 447.62, LAMPHOLE
675421.78, 1456000.45, 448.02, STORMDRAIN

D. Disclaimer

Since many of the water and sewer contracts date back to a time prior to the above as-built survey requirements, the Division of Water and Sewer does not guarantee the accuracy of record drawings.

E. Digital Data License Agreement

Any Engineering organization wishing to receive digital copies of record drawings may do so by completing a digital data license agreement. This information will not be submitted via e-mail. This information may be requested by visiting the Division of Water and Sewer. The requested information will be copied onto a compact disk. A charge will apply for this information and will be based on the number of contract drawings. As of the date of the adoption of these Design Guidelines the fee is $2.00 per sheet digitally copied.

CHAPTER 1
APPENDIX

- **General Notes (Developer Projects)**
- **General Notes (Capital Projects)**

GENERAL NOTES (DEVELOPER PROJECTS)

At a minimum, the following general notes shall be added to the Title Sheet.

GENERAL CONSTRUCTION NOTES

1. THE CONTRACTOR SHALL NOTIFY THE HARFORD COUNTY DEPARTMENT OF PUBLIC WORKS, BUREAU OF CONSTRUCTION MANAGEMENT, AT LEAST THREE (3) DAYS PRIOR TO STARTING CONSTRUCTION. PHONE (410) 638-3217, OR BY FAX (410) 879-8439.

2. CONSTRUCTION OF THIS PROJECT SHALL BE PERFORMED IN ACCORDANCE WITH THE CURRENT EDITION OF THE STANDARD SPECIFICATIONS AND DETAILS FOR WATER MAINS AND SANITARY SEWERS OF THE HARFORD COUNTY DEPARTMENT OF PUBLIC WORKS AND WITH THE CONTRACT PLANS AND SPECIFICATIONS. ALL WORK SHALL BE PERFORMED IN ACCORDANCE WITH THE MARYLAND OCCUPATIONAL SAFETY LAWS. SEE HARFORD COUNTY STANDARD SPECIFICATIONS. ALL MATERIALS USED ON THIS PROJECT SHALL BE LISTED IN THE APPROVED MATERIALS LIST AS IDENTIFIED IN THE RULES AND REGULATIONS OF THE DIVISION OF WATER AND SEWER.

3. ALL WORK WITHIN THE HARFORD COUNTY ROAD RIGHT-OF-WAYS SHALL BE PERFORMED IN ACCORDANCE WITH THE CONTRACT DRAWINGS AND SPECIFICATIONS AND THE HARFORD COUNTY ROAD CODE REQUIREMENTS.

4. THE CONTRACTOR SHALL VERIFY THE LOCATION OF EXISTING UTILITIES BY CONTACTING “MISS UTILITY” (1-800-257-7777) 72 HOURS PRIOR TO THE START OF CONSTRUCTION. ALL LOCATION MARKINGS FOR WATER AND SEWER LINES WILL BE PROVIDED THROUGH A REQUEST TO THE MISS UTILITY ONE CALL SYSTEM BY THE HARFORD COUNTY DIVISION OF WATER AND SEWER. IT IS THE CONTRACTORS RESPONSIBILITY TO REFERENCE AND MAINTAIN THE LOCATION MARKINGS DURING THE CONSTRUCTION OF THE PROJECT. IN THE EVENT THAT A UTILITY LOCATION NEEDS TO BE RE-ESTABLISHED BY HARFORD COUNTY, THE COST TO PROVIDE THIS SHALL BE BORNE BY THE CONTRACTOR.

5. EXISTING UTILITIES ARE SHOWN FOR THE CONVENIENCE OF THE CONTRACTOR AND THE COMPLETENESS OR ACCURACY OF THE SAME IS NOT GUARANTEED. THE CONTRACTOR SHALL DETERMINE THE LOCATION AND ELEVATION OF THE EXISTING UTILITIES BEFORE TRENCH EXCAVATION BEGINS. HE SHALL PROTECT SERVICE CONNECTIONS AND MAINTAIN THEIR UNINTERRUPTED SERVICE. ANY DAMAGE CAUSED BY THE CONTRACTOR SHALL BE REPAIRED IMMEDIATELY. THE COST OF SUCH REPAIRS SHALL BE BORNE BY THE CONTRACTOR.

6. COORDINATES SHOWN ON THIS CONTRACT REFER TO THE MARYLAND STATE PLANE COORDINATE SYSTEM NAD 83 AND ARE BASED ON HARFORD COUNTY MONUMENT “_____“, N. _____, E. _____.
ELEVATIONS SHOWN HEREON ARE REFERRED TO NGVD _____ WITH LOCAL REFERENCE TO HARFORD COUNTY MONUMENT “_____“, ELEVATION _____.

7. ALL STAKING, RESTAKING, AND CUT SHEETS SHALL BE PERFORMED BY A REGISTERED AND LAND SURVEYOR OR PROFESSIONAL ENGINEER AT THE CONTRACTORS OR OWNERS EXPENSE, INCLUDING HOUSE SERVICES.

8. ALL PIPE ELEVATIONS ARE TO INVERT OF PIPE, UNLESS OTHERWISE SPECIFIED.

9. SEDIMENT CONTROL SIGN-OFF IN THE SIGNATURE BLOCK DOES NOT RELEASE THE ENGINEER/OWNER FROM OBTAINING AN APPROVED SEDIEMTN AND EROSION PLAN AND A GRADING PERMIT.

10. A HARFORD COUNTY ROADS UTILITY CONSTRUCTION PERMIT MAY BE REQUIRED PRIOR TO BEGINNING CONSTRUCTION OF THIS PROJECT. CONTRACTOR SHALL NOTIFY THE HARFORD COUNTY DEPARTMENT OF UTILITY MANAGEMENT AT 638-3420 48 HOURS PRIOR TO BEGINNING CONSTRUCTION WITHIN EXISTING COUNTY ROADWAYS.

11. A TRAFFIC CONTROL PLAN MAY BE REQUIRED, AND IF REQUIRED MUST BE APPROVED FOR THIS PROJECT PRIOR TO CONSTRUCTION. TRAFFIC CONTROL SHALL BE IN ACCORDANCE WITH THE LATEST EDITION OF THE MANUAL OF UNIFORM TRAFFIC CONTROL DEVICES.

12. ALL TRENCH COMPACTION SHALL BE IN ACCORDANCE WITH SECTION 02250, D.2A OF THE STANDARD SPECIFICATIONS, UNLESS OTHERWISE NOTED ON THE PROFILES, OR AS SPECIFIED BY A STATE HIGHWAY UTILITY ACCESS PERMIT.

13. WHEN THE PIPE MATERIAL CHANGES FROM NON-METALLIC TO METALLIC, THE TRACER WIRE SHALL CONTINUE ALONG THE METALLIC PIPE TO MAINTAIN CONTINUITY.

14. FOR ALL UTILITY CONSTRUCTION OUTSIDE OF THE COUNTY OR STATE ROAD RIGHT-OF-WAY, AND OUTSIDE OF THE PROPOSED SUBDIVISION (IE. ON PRIVATE PROPERTY), THE CONTRACTOR MUST VIDEOTAPE THE ABOVE PROJECT AREA FOR THE PURPOSE OF DOCUMENTING PRE-CONSTRUCTION CONDITIONS. TWO COPIES OF THE VIDEOTAPE MUST BE SUBMTITED AT THE PRE-CONSTRUCTION MEETING. ONE COPY SHALL BE RETAINED BY THE DIVISION OF WATER AND SEWER. VIDEOTAPE SHALL BE IN THE VHS FORMAT OR DVD.

GENERAL NOTES (CAPITAL PROJECTS)

At a minimum, the following general notes shall be added to the Title Sheet.

GENERAL CONSTRUCTION NOTES

1. CONSTRUCTION OF THIS PROJECT SHALL BE PERFORMED IN ACCORDANCE WITH THE CURRENT EDITION OF THE STANDARD SPECIFICATIONS AND DETAILS FOR WATER MAINS AND SANITARY SEWERS OF THE HARFORD COUNTY DEPARTMENT OF PUBLIC WORKS AND WITH THE CONTRACT PLANS AND SPECIFICATIONS. ALL WORK SHALL BE PERFORMED IN ACCORDANCE WITH THE MARYLAND OCCUPATIONAL SAFETY LAWS. SEE HARFORD COUNTY STANDARD SPECIFICATIONS. ALL MATERIALS USED ON THIS PROJECT SHALL BE LISTED IN THE APPROVED MATERIALS LIST AS IDENTIFIED IN THE RULES AND REGULATIONS OF THE DIVISION OF WATER AND SEWER.

2. ALL WORK WITHIN THE HARFORD COUNTY ROAD RIGHT-OF-WAYS SHALL BE PERFORMED IN ACCORDANCE WITH THE CONTRACT DRAWINGS AND SPECIFICATIONS AND THE HARFORD COUNTY ROAD CODE REQUIREMENTS.

3. THE CONTRACTOR SHALL VERIFY THE LOCATION OF EXISTING UTILITIES BY CONTACTING “MISS UTILITY” (1-800-257-7777) 72 HOURS PRIOR TO THE START OF CONSTRUCTION. ALL LOCATION MARKINGS FOR WATER AND SEWER LINES WILL BE PROVIDED THROUGH A REQUEST TO THE MISS UTILITY ONE CALL SYSTEM BY THE HARFORD COUNTY DIVISION OF WATER AND SEWER. IT IS THE CONTRACTORS RESPONSIBILITY TO REFERENCE AND MAINTAIN THE LOCATION MARKINGS DURING THE CONSTRUCTION OF THE PROJECT. IN THE EVENT THAT A UTILITY LOCATION NEEDS TO BE RE-ESTABLISHED BY HARFORD COUNTY, THE COST TO PROVIDE THIS SHALL BE BORNE BY THE CONTRACTOR.

4. EXISTING UTILITIES ARE SHOWN FOR THE CONVENIENCE OF THE CONTRACTOR AND THE COMPLETENESS OR ACCURACY OF THE SAME IS NOT GUARANTEED. THE CONTRACTOR SHALL DETERMINE THE LOCATION AND ELEVATION OF THE EXISTING UTILITIES BEFORE TRENCH EXCAVATION BEGINS. HE SHALL PROTECT SERVICE CONNECTIONS AND MAINTAIN THEIR UNINTERRUPTED SERVICE. ANY DAMAGE CAUSED BY THE CONTRACTOR SHALL BE REPAIRED IMMEDIATELY. THE COST OF SUCH REPAIRS SHALL BE BORNE BY THE CONTRACTOR.

5. COORDINATES SHOWN ON THIS CONTRACT REFER TO THE MARYLAND STATE PLANE COORDINATE SYSTEM NAD 83 AND ARE BASED ON HARFORD COUNTY MONUMENT “_____“, N. _____, E. _____.
ELEVATIONS SHOWN HEREON ARE REFERRED TO NGVD ____ WITH LOCAL REFERENCE TO HARFORD COUNTY MONUMENT “_____“, ELEVATION _____.

6. ALL STAKING, RESTAKING, AND CUT SHEETS SHALL BE PERFORMED BY A REGISTERED AND LAND SURVEYOR OR PROFESSIONAL ENGINEER AT THE CONTRACTORS EXPENSE, INCLUDING HOUSE SERVICES.

7. ALL PIPE ELEVATIONS ARE TO INVERT OF PIPE, UNLESS OTHERWISE SPECIFIED.

8. TRAFFIC CONTROL SHALL BE AS SHOWN ON THESE PLANS AND/OR AS SPECIFIED BY THE S.H.A. UTILITY ACCESS PERMIT. TRAFFIC CONTROL SHALL BE IN ACCORDANCE WITH THE LATEST EDITION OF THE MANUAL OF UNIFORM TRAFFIC CONTROL DEVICES.

9. EXISTING MAILBOXES TO BE DISTURBED BY CONSTRUCTION SHALL BE MOVED TO A TEMPORARY LOCATION UNTIL CONSTRUCTION IN THE AREA IS COMPLETED, AT WHICH TIME THEY SHALL BE RE-LOCATED BACK TO THEIR PERMANENT LOCATION. TEMPORARY AND FINAL LOCATIONS SHALL MEET THE APPROVAL OF THE PROPERTY OWNER AND POST MASTER.

10. ALL TRENCH COMPACTION SHALL BE IN ACCORDANCE WITH SECTION 02250, D.2A OF THE STANDARD SPECIFICATIONS, UNLESS OTHERWISE NOTED ON THE PROFILES, OR AS SPECIFIED BY A STATE HIGHWAY UTILITY ACCESS PERMIT.

11. ALL AREAS DISTURBED FROM THE CONTRACTOR'S CONSTRUCTION ACTIVITIES SHALL BE RESTORED TO A CONDITION AT LEAST EQUAL TO THAT WHICH EXISTED PRIOR TO START OF CONSTRUCTION. ROADSIDE DRAINAGE DITCHES, CULVERTS, AND UNDERDRAINS WHICH ARE DAMAGED OR DESTROYED BY CONSTRUCTION, SHALL BE RESTORED TO A CONDITION AT LEAST EQUAL TO THAT WHICH EXISTED PRIOR TO THE START OF CONSTRUCTION. THE COST OF ANY RESTORATION SHALL BE BORNE BY THE CONTRACTOR.

12. THE CONTRACTOR SHALL VIDEOTAPE THE PROJECT AREA AS DETAILED IN THE SPECIFICATIONS FOR THE PURPOSE OF DOCUMENTING PRE-CONSTRUCTION CONDITIONS. THE VIDEOTAPE MUST BE SUBMITTED AT THE PRE-CONSTRUCTION MEETING. THE VIDEOTAPE SHALL BE IN A VHS OR DVD FORMAT.

CHAPTER 2

ENGINEERING EVALUATIONS

CHAPTER 2
ENGINEERING EVALUATIONS

Page No.

2.1 Applicability **25-35**

2.2 Purpose **25-35**

2.3 Report Content **25-35**

A. General 25-35
B. Design Analysis 25-36
C. Design Computations 25-37

CHAPTER 2
ENGINEERING EVALUATIONS

2.1 Applicability

An engineering evaluation may be required for Developer and Capital Projects whenever water and/or sewer system extensions or improvements are being considered. For Developer Projects, an engineering evaluation in the form of a written report may be required for the following: Water or Sewer system capacity analyses, alternative alignments analysis, present worth cost analyses, life cycle cost analysis, planning of regional water or sewer systems, back-up information for Rules and Regulation policies. The development of sewage pumping station design criteria shall always be submitted in the form of an engineering evaluation as presented in Chapter 6. The Engineer shall be aware of other requirements related to SCADA studies, telemetry studies, and design development in accordance with Chapters 6, 7 and 8. For capital projects, an engineering report will be required if specified in the scope of services.

2.2 Purpose

The engineering evaluation report is intended to be a concise presentation of existing and proposed conditions with alternative proposals for satisfying the needs of the project. The report shall be addressed to the Deputy Director of the Division of Water and Sewer and delivered to the designated Project Manager. The report shall be presented in an organized manner so that the Deputy Director, his staff, County officials and other interested agencies may quickly identify and comprehend all aspects of the project including, but not limited to, the purpose, scope, cost and scheduling of the project.

2.3 Report Content

A. General

Reports shall be presented in a neat and legible manner. They shall be submitted on 8 ½-inch x 11-inch bond paper and either prepared with neat and legible hand lettering or by means of a standard word processor, suitable for reproduction. Brief reports may be published in letter form, properly identified and with attachments referenced in the text. Lengthy or complex reports shall be suitably bound on the left edge and shall include a cover with appropriate identification of the Engineer, project name, owner and date. Unless otherwise stipulated, the Engineer shall provide four (4) copies of reports.

The Engineer shall present a concise discussion of all relevant factors that led to the report conclusions and recommendations.

It is understood that all required subject matter for reports cannot usually be determined in advance of the research and development, as is necessary to identify all potential project issues. However, through experience and practice it is recognized that there are certain categories of information which, when properly addressed, will ensure all factors are considered prior to establishing appropriate conclusions. The text of the report will usually include a discussion of some or all of the following topics as applicable:

1. Locations, origin, purpose and scope of project

2. Existing project conditions

3. County population projections and projected needs

4. Design analysis including all design criteria employed (See paragraph B below)

5. Design computations (See paragraph C below)

6. Function, layout and siting requirements of proposed facilities

7. Evaluation of alternatives (Feasibility, construction constraints, project costs, environmental constraints, non-economic factors, ease of operation and maintenance, operation and maintenance costs)

8. Cost estimates and comparison of alternatives including rights-of-way requirements

9. If required, present worth cost determination and comparison based on Engineering Economics methods.

10. Required permits and approvals of other agencies

11. Conclusions and recommendations

12. Schedule for implementation

13. Project illustrations

The addition or elimination of subject matter for the report is well within the authority of the Division of Water and Sewer, whenever the nature of the project dictates.

B. Design Analysis

1. General

In developing design requirements for elements of a water or sewer system, the Engineer shall refer to the Harford County Water and Sewerage Master Plan to ascertain both the extent of existing or planned facilities in the service area and their relationship to the project under consideration. One or more maps shall be prepared showing the project location and the relationship of major elements of the system as shown on the Master Plan. The project map(s) shall be developed based on the following criteria:

a. Displayed at a scale consistent with the scope of the project but not less than 1” = 400’.

b. Include a reasonable area surrounding the project.

c. Show significant topographical features such as contours, roads, structures vegetation, streams, water bodies, property boundaries and other pertinent information.

d. Show the location, size and extent of the existing system(s) being addressed in the report.

e. Show locations of all proposed system additions.

f. All design notations used as a basis for computing system loads, such as drainage area or service area limits by zoning, future extensions of pipe systems or networks, other Capital Projects and any public improvements contemplated by other governmental agencies shall be superimposed on the report map.

For water and sewer facilities identified in the Master Plan, Harford County may elect to provide the Engineer with specific design requirements determined as a result of previous engineering analysis. In such cases, the Engineer shall incorporate these requirements into the design report and will reference the letter or other documentation by which the requirements are conveyed to the Designer from the Project Manager. For example, Harford County may specify system flow rates to be used in sizing pump stations and sewer lines or water transmission main, based on a previous hydraulic analysis.

2. Design Criteria and System Layout

All systems shall be designed based on the guidelines and criteria established by this manual.

C. Design Computations

Design computations, if required by the County, shall be developed for all features of the proposed system and shall be in sufficient detail to enable the Division of Water and Sewer to make an expeditious review of the methods and criteria employed and the corresponding results obtained. Design computations shall be submitted with the report.

CHAPTER 3

SEWER MAIN DESIGN

CHAPTER 3
WATER MAIN DESIGN

Page No.

3.1 General **25-38**
A. Responsibility of the Engineer 25-38
B. Limitations of Topics Presented in Design Guidelines 25-38
C. Abbreviations 25-38
D. Definitions 25-39

3.2 Design Criteria **25-39**
A. General 25-39
B. Pre-Design Meeting 25-39
C. Demand Calculations 25-40

3.3 Water Main Design **25-42**
A. Hydraulic Computations 25-42
B. Pipeline Alignment 25-44
C. Water Mains: Plan 25-50
D. Water Mains: Profile 25-51
E. Pipeline Materials 25-52
F. Types of Joints 25-55
G. Fittings 25-56
H. Relocation of Water Pipelines 25-57

3.4 Appurtenances **25-58**
A. General 25-58
B. Valves 25-58
C. Fire Hydrants 25-59
D. Cap and Blow 25-60
E. Air Release and Vacuum Valves 25-61
F. Tunnels and Casing Sleeves 25-63

3.5 Water House Connections **25-63**
A. General 25-63
B. Change in Dwelling Type 25-63
C. Maximum and Minimum Service Elevations 25-63
D. Residential – Single Family and Townhomes 25-64
E. Residential – Townhouse Condominium, Garden-Style Condominium and Carriage Court Units 25-65
F. Residential – Apartment-Style Condominiums 25-66
G. Residential – Apartments 25-67
H. Business, Commercial and Industrial Services 25-67
I. Location 25-68
J. Cover 25-68
K. Materials 25-68
L. Appurtenances for Service Connections 25-68
M. Pressure Reducing Valves 25-69
N. Computation 25-69
O. Abandonment 25-70

CHAPTER 3
WATER MAIN DESIGN

3.1 General

A. Responsibility of the Engineer

This chapter addresses the selection and use of design criteria and practices applicable to the design of water distribution system projects in Harford County. The subject matter discussed includes the layout of piping systems, selection and employment of pipeline materials and the use of appurtenances. While the requirements described for the various aspects of design will include and cover the majority of conditions encountered, there is no intention to relieve the Engineer of responsibility to recognize when conditions are not favorable for the application of standards. The Engineer must be continually alert to conditions that cannot be satisfied by the application of these standard criteria.

It shall be the responsibility of the Engineer to check and verify the static and dynamic pressure conditions in the water system under current and ultimate conditions with respect to the impacts on the design. The Engineer shall be responsible for specifying materials and designing thrust restraint for system pressures exceeding normal operating pressures noted in Section 3.3.

Harford County approval of the plans and specifications does not relieve the Engineer of responsibility for errors or omissions in preparing the design.

B. Limitation of Topics Presented in Design Guidelines

It is not possible to include in these guidelines all features of design and drafting, which are necessary to accomplish the development of construction documents for all projects. The topics addressed are limited to those that will help the Engineer perform most engineering tasks in an efficient manner and comply with County practice. Although it is the Engineer's responsibility to exercise professional judgment in the acceptance or use of the standards or features of design included herein, the Engineer shall recognize that they are given to assist in the development of the project in the manner preferred by Harford County. Deviations from the design standards must be brought to the attention of the Division of Water and Sewer. Waivers of the design guidelines must be justified to the Division of Water and Sewer, in writing, with an engineering evaluation, which includes consideration of life cycle costs and maintenance requirements. Approval or denial of the waiver requests will be by return letter signed by the Deputy Director.

C. Abbreviations

For standard abbreviations, see Section 1.2, "Abbreviations" of this design manual.

D. Definitions

Distribution Mains: Water mains connecting the transmission mains to the water house connections. Distribution mains shall generally be 8 inches in diameter. Distribution mains which provide fire protection shall be no less than 8-inch in diameter.

Domestic service only: Water mains for domestic service only may be two (2) inches to six (6) inches in diameter where fire hydrants are not required.

Transmission Mains: Large diameter water mains that convey water from the supply source to the storage facilities and to the distribution mains. Transmission mains shall generally be 12-inch diameter and larger.

Water House Connection: Service lines within public roads or rights-of-way connecting the distribution mains to individual homes, buildings or facilities for both consumptive use and on site fire protection.

3.2 Design Criteria

A. General

The sizing of major components of the County water distribution system such as transmission mains, major distribution mains, storage facilities and booster pumping facilities are generally the responsibility of the Division of Water and Sewer.

The Master Plan generally shows the major existing and planned system components. The Engineer shall be familiar with and design in accordance with the Master Plan.

Generally, the Engineer will be selecting distribution mains of 12-inch diameter and smaller and often will be required to provide the minimum size mains meeting the design criteria as presented in Section 3.3A, “Hydraulic Computations”.

The water design criteria presented herein shall apply to Developer Projects as well as Capital Projects.

B. Pre-Design Meeting

Although it is not required, it is encouraged that prior to commencing any work, the Engineer schedule a pre-design meeting with the Division of Water and Sewer, or other appropriate agency, to discuss any topics that are particularly important in the design of the project. Pertinent topics may include any of the following:

1. Sizing of major water components
2. Development of population projections and water demand
3. Route selection and location of the pipe in the public right-of-way
4. Interaction with, and crossings of, other known utilities

5. Methods of crossing roads, railroads, and streams
6. Pipe materials and appurtenances
7. Pipe access
8. Future extensions
9. Identification of any storage facilities in the network to be affected by the project

C. Demand Calculations

1. General

All population projections required for determining water demands are to be established as described in Chapter 5, “Common Design Guidelines”. The average day demand for a service area is the sum of the average day demands for the residential, institutional, commercial and industrial components within the service area. Similarly, the maximum day demand for a service area is the sum of the maximum day demands for the residential, institutional, commercial and industrial components within the service area. If the proposed service area has both existing and future developed properties, the water demand projections shall account for both.

2. Residential, Business, Commercial and Industrial Water Demands

Average day demands shall be determined by multiplying the applicable population projections by the average day per capita demand indicated in Table 3.2A, “Average Day Water Demands”. Maximum day demands shall be determined by multiplying the applicable average day demand by the required peaking factors.

TABLE 3.2A: WATER DEMAND DEVELOPMENT

CATEGORY	ZONE 1	ZONE 2	ZONE 3	ZONE 4
Existing residential, gpcd	80	87	83	85
Future residential, gpcd	110	110	110	110
Existing and future Business, Commercial & Industrial, gpad	1200	1200	1200	1200
Average day demand to maximum day demand Peak Factor	1.45	1.45	1.45	1.45

Note: 1. gpcd – gallons per capita per day
2. gpad – gallons per acre per day

3. Fire Flow Rates

a. Water mains shall deliver the following fire flows in accordance with Section 267-104, Paragraph B of the County Code entitled "Adequacy Standards":

1) 500 gpm for detached single family residential uses or for institutional uses less than 4,000 square feet.

2) 1,000 gpm for institutional uses between 4,000 and 12,000 square feet.

3) 1,500 gpm for single family attached and multi-family residential uses and institutional uses between 12,000 square feet and 40,000 square feet.

4) 1,500 gpm for a use that is permitted in B1, B2, B3 or ORI zoning categories excluding residential used.

If the gross square footage of a building or buildings separated by less than 30 feet exceeds 40,000 sq. ft., the 1,500 gpm fire flow requirements as noted must be increased to 2,500 gpm unless a fixed automatic fire suppression system is provided for the entire gross square footage. The fixed automatic fire suppression system shall be a system defined by the regulations utilized by the Maryland State Fire Marshall's Office.

5) 2,500 gpm for uses permitted only in the CI, GI or MO zoning categories.

Fire flows outlined above shall be attained during a two-hour event with a 20 psi residual pressure and a concurrent maximum day demand imposed on the entire water system. The fire event shall not cause the system pressure elsewhere in the water distribution system to drop to less than 20 psi.

Institutional uses noted above shall include any use listed in the Harford County Zoning Code on Table 1, "Principle Permitted Uses" under the category of institutional.

b. <u>Alternative for Existing Lots</u>

Building permit approvals or site plan approvals on lots which existed prior to August 10, 1993, which do not meet the required fire flow standards outlined above may be alternatively approved as follows:

The Developer/Owner/Applicant will be required to demonstrate, by way of a certification from a registered professional engineer specializing in fire protection engineering and licensed by the State of Maryland, certifying to the County that the building and use for which a permit is sought meets applicable building and life safety codes, satisfies the present ISO Fire Suppression Rating Schedule and, to the extent practical, utilizes fire resistant materials. Such certification may reduce the required fireflow due to the use and application of various building materials.

c. Alternative for Existing Structures

The required fire flows specified herein shall not apply to existing structures, or to renovations or modifications of structures existing as of August 10, 1993, which do not materially increase the square footage or change the type of use of the building.

3.3 Water Main Design

A. Hydraulic Computations

1. General

As discussed in Chapter 2, “Engineering Evaluations,” the Division of Water and Sewer reserves the right to determine sizing of major water transmission mains, storage facilities and booster stations based on the Master Plan.

The Division of Water and Sewer reserves the right to request the Engineer perform a hydraulic analysis to determine if the design criteria can be met with the proposed system improvements. In such a case, the Engineer shall provide a computer-based hydraulic model of the effects of the proposed improvements on the public water system. The Engineer shall consult with the Division of Water and Sewer for baseline information regarding pressures, pressure zone boundaries, system capacities and other operational considerations. Computer model simulations of the proposed water system improvements shall be submitted to the Division of Water and Sewer for review and approval.

If required, 24 and 48-hour extended period computer simulations shall be performed using both average day and maximum day demands, for both current and full build-out conditions.

Fire flows shall be modeled as a single event under a maximum day demand conditions and a 2-hour fire duration with all water storage facilities at their water levels during maximum day demand conditions. The Division of Water and Sewer will supply the tank level information to the Engineer.

2. Design Flows and Residual Pressures

The Engineer shall follow the guidelines in this manual for the derivation of design flows. The calculation of the design flow rate will usually require the computation of the average day rate for the facility, application of a peaking factor to derive the maximum day rate and then addition of the fire flow requirement.

The following two pressure requirements must be met within the distribution system and are to be used in the design of public water mains.

- The Division of Water and Sewer has established an objective of a minimum 28 psi and maximum 120 psi; during average day and maximum day conditions, as measured at the curb stop ground elevation.

- In no case may the pressure within any portion of the water distribution system be less than 20 psi, as measured at the curb stop ground elevation. This condition includes fireflow events, maximum day demand conditions, and maximum day demand conditions with fireflow events.

In some locations, the main size will be determined by the flow rate and associated friction losses required to refill a storage facility, which may be more critical than the above requirements. The Division of Water and Sewer will identify this design condition, if applicable.

As previously noted, Harford County's water service area is divided into four (4) zones of service. In general, the minimum and maximum ground elevations to serve each zone are shown below:

	Min. Elev.	Max Elev.
Zone 1	0	143
Zone 2	108	285
Zone 3	263	435
Zone 4	310	482

As previously noted, the above service elevations are based on an objective of obtaining minimum of 28 psi and a maximum of 120 psi at the ground elevations at the top of the curb stop box.

The Engineer shall consider topographically low points within each Harford County Water Pressure Zone and the effects of water booster pumps on water mains located within these areas. If the net result with booster pumps on (current and ultimate conditions) exceeds 120 psi, then the Engineer shall specify DIP and the necessary special thickness class. The Engineer shall also design the thrust restraint for the water main.

3. Velocities

Although the velocities and flow direction may vary considerably in water mains, there are upper velocity limits that indicate to the Engineer that design deficiencies may exist. The following are useful guidelines:

a. Velocities greater than 6 fps at the maximum day rate of flow may produce the potential for valve and joint damage due to water hammer. Velocities greater than 6 fps at the maximum day rate shall be avoided.

b. The design of pipelines based solely on velocity considerations may not provide optimum operating conditions for the distribution system.

4. Hazen-Williams “C-Factor” and Minor Losses

The total head loss at the point of discharge for design flows shall be the sum of both friction and minor losses. The elevation difference between the source and discharge point shall be algebraically added to the total head loss.

Head losses for new pipes shall be computed using the Hazen-Williams formula and a C-Factor of 120. Although some new pipe materials may have a higher C-Factor, a conservative approach shall be used to account for the potential of pipeline tuberculation and scaling in the future.

B. Pipeline Alignment

1. General

Consideration must be given to space requirements for future utilities, particularly sanitary sewers, storm drains and force mains. In the absence of sewer or storm drain design, the Engineer shall recommend the space requirements of the sewer or drainage facilities and provide the necessary clearances. This requirement is particularly important at roadway intersections.

The Engineer shall identify and locate all existing above and below ground utilities before selecting the location of the pipeline. When plans of existing utilities are insufficient to accurately locate existing underground obstructions, the Engineer shall test pit to uncover the subject facility so that the horizontal and vertical positions of existing utilities can be accurately determined. The Engineer will be responsible for providing all traffic control and public safety measures necessary to locate the utilities and restore the surface. The Engineer shall coordinate the test pit operations and provide a field survey crew to physically locate the subject facility. A utility permit will be required from the Harford County Department of Public Works or State Highway Administration for all test pit excavations.

2. Horizontal Alignment - Location

The horizontal alignment shall take into account the following general alignment guidelines. Water mains larger than 12 inches in diameter may have other limitations and requirements that alter these general alignment guidelines.

a. Extensions of distribution mains will normally be in a grid pattern with interconnecting nodes at street intersections.

Where feasible, water mains at the end of cul-de-sacs shall be looped to other mains. If the road network within condominium or townhouse subdivisions have squares or cul-de-sacs with islands, the water main shall be looped within the square and cul-de-sac.

b. In the layout of distribution mains, non-looped situations shall be avoided. All mains both internal to the project and external shall be continued to the nearest point of connection as directed by the Division of Water and Sewer. Where temporary non-looped connections are appropriate, the main shall be terminated so as to facilitate connection or extension in the future with minimal inconvenience to the existing system.

For Developer projects, water mains which serve a subdivision or service area shall be fed with a redundant feed for reliability and water quality purposes when the number of units exceeds 100.

c. The placement of water mains within Harford County road right-of-ways shall be as follows:

1. In new subdivisions with closed road sections.

Water mains shall be designed seven (7) feet from the centerline of the road right-of-way, generally on the side nearest the higher ground (opposite side of road from the sanitary sewer). The water main shall be within the pavement area, no less than five (5) feet from the face of the curb.

For road widths 24-feet or less, water mains shall be designed five (5) feet from the road right-of-way centerline, in lieu of the seven (7) feet stated above.

2. In existing subdivisions with closed road sections.

Generally, the water main location must be the same as in new subdivisions; however, the location of existing utilities shall be fully considered.

3. In existing subdivisions with open road sections.

   Generally, the water main shall be located two (2) feet beyond the edge of paving on the opposite side of the road from the sanitary sewer. In no case may the water main lie beneath a future curb or sidewalk. The location of existing utilities shall be fully considered.

d. For Developer Projects, the design of the public water, sewer and storm drain utilities within proposed developments shall be prepared concurrently to ensure compatibility of the utilities. The proposed storm drains and storm water management facilities shall be shown on the water and sewer contract drawings.

e. Water mains may be designed on a curved alignment to reduce the number of bends. Wherever curved alignments are proposed the following constraints shall be adhered to:

   1. PVC AWWA C-900

      a. 4 thru 8-inch diameter

         The minimum horizontal and vertical curve shall be 570 feet. Tapped water services are not allowed on curved alignments. Wherever practical, bends shall be used in lieu of curved pipe alignments when approaching the minimum allowed radius.

      b. 12-inch diameter

         Curved alignments are not allowed.

   2. Ductile Iron Pipe – Push On

      a. 8-inch thru 30-inch diameter

         The minimum horizontal and vertical curve shall be 380 feet.

      b. 30-inch diameter and above

         The minimum curve allowed shall be determined by the Division of Water and Sewer on a case by case basis.

   The minimum curvature for all other pipeline materials shall be determined by the Division of Water and Sewer on a case by case basis.

f. The alignment within existing roadways, if possible, shall avoid high traffic volume roads, if other options are available. The alignment shall be designed to allow the construction of the water main without the need to have road closings. When a water main is required to cross a Harford County road right-of-way, the Engineer, after considering the type and condition of the road, traffic volumes, disruption to traffic, possible conflicts with existing utilities, and specific conditions on the project site, shall recommend whether to open cut, tunnel, or jack and bore the utility across the roadway, on a case by case basis. The Harford County Division of Engineering and Construction shall make the final decision as to the method to be used and the approved method shall be noted on the plans by the Engineer.

g. Longitudinal alignments within the State Highway Administration road right-of-way shall be avoided. Approval of such longitudinal alignments must be received in writing from the Division of Water and Sewer. The Engineer shall be aware that what the State Highway Administration approves may not be acceptable to the Division of Water and Sewer.

h. In existing road right-of-ways the alignment shall also try to avoid the removal of trees or landscaped areas. In parks and public right-of-way where location of the water main would require removal of trees, the Engineer shall obtain the approval of the appropriate agency or agencies for tree removal. When the pipeline must be located outside the road right-of-way, the alignment shall be located to minimize disturbance to environmental features. In addition to trees, the alignment shall attempt to avoid steep slopes, wetlands and other sensitive areas. The alignment shall follow the property lines as much as possible.

i. When existing roadways are involved, the horizontal alignment of the road must be evaluated for acceptable geometry and the water main designed with respect to possible roadway improvements to avoid costly relocations. The Engineer shall evaluate the plane geometry of the road with respect to movement of traffic and available right-of-way width for the accommodation of the pipeline.

j. Water main easements are routinely acquired during the subdivision process for the future extension of the water system to serve adjacent properties. Where the construction of the future extension of the water main would be close to a house foundation or other structure, the water main extension shall be constructed as part of the subdivision.

In residential subdivisions where an easement is required between two adjacent lots for the extension of the water system, a water main shall be provided within the easement between the adjacent lots. The water main shall extend the full length of the easement between the lots.

In cases where only a utility easement is required to be extended to the limits of the property being developed in order to provide future service to an adjacent property, that easement shall be cleared and otherwise prepared for the future extension of the main.

Additional easement requirements are presented in Chapter 5.

k. For Developer Projects, utilities owned by other public and private entities such as gas, electric, telephone, cable TV and others, shall be located within the shoulder of the road or behind the curb line.

l. Water main alignments shall not be located within existing or proposed wetland mitigation areas, forest retention areas, or reforestation areas.

m. Water mains shall not be located within storm water management facilities. Likewise, any drainage and utility easement for a water main shall not be located within storm water management facilities. These areas include but are not limited to storm water management ponds, water quality traps and ditches, rain gardens and recharge areas and include the associated embankments, rip-rap areas, spillway, outfall, channel, fenced-in area or other features associated with the storm water management facility.

n. All distribution and transmission main extensions to serve a development project or water petition shall be designed and constructed to the most distant property corner along the road frontage of the property being serviced. Distribution mains traversing through a subdivision shall be designed and constructed to the property line at locations where a roadway extension is planned, proposed or existing.

o. For developer projects, transmission mains shall be constructed through the subdivision if the master water and sewer plan identifies a proposed transmission main at the property location. Likewise, if a subdivision requires a water main extension at a location which the master water and sewer plan identifies a proposed transmission main, the Engineer shall up-size the water main extension to the size required in the master plan. If a larger size main is constructed, the PWUA will discuss potential recapments to recover the cost of the pipe size increase.

3. Vertical Alignment - Location

The vertical alignment of water mains shall take into account the following general alignment guidelines:

a. The minimum ground cover required over a water main is 3.5 feet and is measured from the outside top of pipe to the actual ground surface in existing developments. In new subdivisions, when grading and paving is to be accomplished as part of the project, the cover is measured from the top of the pipe to finished grade.

b. Where open-section roadways are proposed, the depth of the water main shall be set a minimum of 3.5 ft. below the bottom elevation of the side ditches.

c. When existing roadways are involved, the vertical alignment of the road must be evaluated for acceptable geometry and the main designed with respect to possible roadway improvements to avoid costly future relocations. The Engineer shall consult with the appropriate Highway agency for recommendation. Acceptable geometry shall be determined by current roadway design standards. Where existing conditions are sub-standard, the Engineer shall superimpose an improved grade on the profile and shall use this grade in the vertical positioning of the main where applicable. When a centerline road grade is thus established by the Engineer the main shall be designed to maintain the necessary cover below existing ground where fills are indicated and below the proposed grade where cuts are indicated. Plan and profile realignment must be considered in a coordinated manner.

d. The minimum vertical curvature allowed shall be identical to the minimum horizontal curvature allowed.

e. Changes in vertical alignment of water mains shall be achieved by fittings or joint deflections. When changes in alignment are made in the horizontal and vertical plane simultaneously (see Chapter 5, “Rotation of Fittings” for design), the degree of change in both planes shall be indicated. The total joint deflection shall not exceed 80% of the manufacturer’s maximum recommended deflection measured from the axis of the pipe (see Section 3.3.B.2.e above).

4. Sizing

Distribution mains shall be sized to provide the required design flow rate and residual pressure as detailed in Section 3.3.A, “Hydraulic Computation,” of this chapter.

5. Cover

   Minimum ground cover over water mains shall be 3.5 ft. The maximum ground cover shall not exceed 9.0 ft.

   In areas outside of existing or planned roads, cover shall be measured from existing grade. The Engineer shall thoroughly investigate, and make suitable allowances for likely changes to existing topography. Such changes include future erosion of streambeds, grading of lots, or roadway widening.

C. Water Mains: Plan

1. For new subdivisions, the utility layout shall be in accordance with the Standard Details.

2. All proposed piping shall be identified by two parallel lines, with alternating segments evenly shaded, showing valves, vaults and fittings. Pipe lines 24-inches in diameter and smaller shall be shown symbolically as two-feet wide as a minimum, based on a scale of 1” = 50’. Pipe lines over 24-inches in diameter shall be shown to scale.

3. All pipe sizes shall be clearly identified. The pipeline and appurtenances shall be carefully dimensioned in the plan view of the plans, so that the horizontal alignment is clearly identified and fixed. Dimensioning of the proposed facility, including fittings and appurtenances, shall be as noted in Section 5.3, “Control, Topographic and Construction Surveys.” Fittings shall be shown by symbols and identified by appropriate notation. Appurtenances shall be called by symbols and notes and dimensioned both in respect to pipeline stationing and in respect to required positions in relationship to surface features.

4. WHC’s shall be shown in the plan view as a pipe from the main to the property line. See Section 3.5, “Water House Connections” of this Chapter for additional guidelines on the design of WHC.

5. The horizontal (and vertical) alignment changes of water mains must be made to follow changes in street alignment or to pass safely over, under or around obstructions. These changes in alignment may be made by the insertions of bends or joint deflections. The radius of the centerline curve of the pipe must be noted on the plans. The point of curvature and point of tangency shall be identified and stationed. Additionally, for water mains greater than 12 inches in diameter the following curve data shall be included on the plan: radius, total deflection angle of curve in degrees, length of curve in degrees, tangent distance in feet, and long chord.

D. Water Mains: Profile

1. Profiles for water main are drawn to accompany the plan and shall be shown below the applicable plan layout on each sheet. For Developer Projects, the profiles may be presented on separate sheets from the plan views.

2. Profiles shall be drawn to a horizontal scale of 1” = 50’ and a vertical scale of 1” = 5’.

3. Pipe diameters and manhole diameters, if applicable, shall be shown to scale.

4. Stations and invert elevations shall be provided on the water main profile at 50-foot intervals, at fittings and at all horizontal deflections. Vertical curve radii shall be shown on the profile when approaching the minimum allowed curvature.

5. Profiles within Proposed Roads:

   In developing the profile for water mains in proposed roads, the proposed finished grade over top the proposed water main shall be used as the reference line for developing the minimum depth of cover. Stations along the street centerline are established in plan and these stations are projected in plan onto the centerline of the road and plotted with respect to this projection on the profile. Following this procedure means that the plan stations of the water main cannot be accurately scaled on the profile when there is any deviation from a tangent alignment in plan. Invert elevations are set to maintain not less than 3.5 feet of pipe cover below the proposed grade over the centerline of the pipe. On a combined water and sewer project, each utility shall be projected onto the centerline road station.

6. Profiles Along Existing Roads:

   In developing the profile information along existing roads, the centerline of the water main in plan shall be used for the profile stationing, which will provide true length profiles. On a combined water and sewer project, the sewer shall be projected onto the water pipeline centerline.

7. For minimum vertical clearances see Chapter 5, Section 5.5B, “Crossings and Clearances.”

8. Utilities that cross water mains shall be plotted to horizontal and vertical scale and identified so as to advise the Contractor of their specific locations. Stations and invert elevations for storm drains, culvert pipes and sewer mains shall be provided at every pipeline crossing for each pipe shown.

If the elevation of the existing pipeline to be crossed is unknown and it is likely to have a significant impact on the water main vertical alignment, the Engineer shall arrange to have a test pit excavated to determine the exact horizontal and vertical location of the existing utility or utilities.

9. The type of fitting, the stationing of the fitting and the fitting invert elevation shall be shown on the profile.

10. At a minimum, the following information shall be shown on the profile:

    a. Road names
    b. Existing and proposed road grade profile
    c. Areas requiring fill and compaction prior to pipe installation
    d. Utilities, existing and proposed
    e. Storm drains, existing and proposed
    f. Existing ground elevation line
    g. Proposed ground elevation line
    h. Center line and name of intersecting roads
    i. Date of topographical survey
    j. Limits of restrained joint pipe

11. The Engineer shall clearly note that the construction of the proposed water main(s) may not occur until the grade is within +/- 0.2 feet of finished grade.

E. Pipeline Materials

1. Allowable water pipe materials for routine projects are Ductile Iron Pipe (DIP), Polyvinyl Chloride Pipe (PVC), Prestressed Concrete Cylinder Pipe (PCCP), and Copper Pipe meeting the requirements of the Standard Specifications and approved materials list. Generally, DIP and PVC will be considered for distribution mains, while DIP and PCCP will be considered for transmission mains and copper for domestic service. PVC pipe is allowed on sizes up to 12 – inches. PCCP will only be considered for transmission mains where services will not be required.

   Ductile iron pipe is required to have a double standard thickness cement lining.

   Pipe materials other than those noted above may be selected when specialized functions are to be satisfied. The use of alternate pipe materials must be approved by the Division of Water and Sewer. When alternate pipe materials are to be used, the appropriate specifications shall be adhered to in the design.

   Only DIP may be utilized wherever the design requires restrained joint pipe.

2. The Engineer shall indicate the pipe class designation in the Bill of Materials on the plans and in the Special Provisions. Changes in the pipe class shall be shown with the limits defined on the pipeline profile. Selection of pipe class and wall thickness shall be as follows:

   a. Copper Tubing, Type K

      The copper tubing in the Standard Specifications is suitable for normal system pressures and earth cover.

   b. Polyvinyl Chloride Pipe (PVC)

      PVC pipe shall meet the requirements of AWWA standards, Section C900 and shall be considered for normal laying depths and conditions. The Engineer shall specify DIP for special applications as noted in paragraph d. below.

      PVC water mains and any other non-metallic pipe material shall contain tracer wire in accordance with the Standard Specifications and Details. All non-metallic water mains shall have test stations for tracer wire at a maximum spacing of every 600 linear feet. Typically, test stations shall be located adjacent to fire hydrants and cap and blows. If the water main does not have fire hydrants or the fire hydrant spacing exceeds 600 feet, then test station shall be installed at the maximum spacing by means of a roadway box. If tracer wire exists at the point of connection, the proposed tracer wire shall be connected in accordance with the Standard Details.

   c. Ductile Iron Pipe (DIP)

      The Standard Specifications use the “special” wall thickness classes of DIP (e.g. class 50, 51, etc.) given in AWWA C150. A special thickness class of 52 shall be used unless the Engineer determines that an alternate special thickness class is required due to a special application (see below). The alternate must be calculated in accordance with the method given in AWWA Standard C150/ANSI A.21.50. The thickness of the selected class shall be equal to or greater than class 52. Pipe thickness, in combination with the pipe bedding, must be sufficient to resist excess deflection and bending stress, compensate for negative manufacturing tolerances and withstand internal operating and surge pressures.

      Calculations shall be performed conservatively, based on using a Type 1 Laying Condition as defined in AWWA C-150. Where field conditions are expected to be moderate, the unit weight of soil shall be 120 pounds per cubic foot (pcf) and the truck load shall be a single AASHTO H-20 truck on unpaved road or flexible pavement with a 1.5 impact factor.

d. DIP Wall Thickness for Special Applications

The wall thickness of DIP for the following special applications is not covered by the Standard Specifications. Additional consideration/calculations are required as indicated below:

1) Shallow cover, less than three and one half (3.5) feet.

2) Vehicular or equipment loading greater than AASHTO H-20 or HS-20 load configuration.

3) Operating pressures greater than those normally encountered in the water distribution system.

4) Excessive surge pressures.

The Designer shall exercise judgment in determining whether a detailed surge analysis is necessary. Conditions warranting a surge analysis may include the following:

a) Impact of a power failure, pump start up or quick closure of discharge valves at water pumping station or in-line booster station.
b) Impact of water column separation
c) Rapid closure of in-line valves
d) Rapid closure of fire hydrants
e) Inadvertent, rapid closure of altitude valves at storage tanks

e. Pre-stressed Concrete Cylinder Pipe (PCCP)

The design of PCCP to withstand the required external loads and internal pressure combinations shall be performed in conformance with the methods described in AWWA C-304. Where field conditions are expected to be moderate, the unit weight of soil shall be 120 pcf and H-2O truck loading shall be used unless other loading is specified.

5. Static and Dynamic Pressure and Leak Tests

Generally, hydrostatic pressure testing of completed pipelines shall be performed as stipulated in the Standard Specifications. Generally, test pressures to be induced at the low point of the test section shall be based on the static gradient within the pressure zone the pipe is to be installed.

The Engineer shall consider topographically low points within each Harford County water pressure zone and the effects of water booster pumps on water mains located within these areas. In these high pressure areas, the Engineer shall also notify the homebuilder of special pressure reducer valve requirements. If it is found that the operating pressure

exceeds 120 psi, the engineer shall specify the required test pressure on the construction drawings.

F. Types of Joints

1. General

Pipe joints shall be in accordance with the Standard Specifications.

2. Polyvinyl Chloride Pipe (PVC)

a. Pipe joint shall be push-on bell and spigot.

b. Use of restrained joints on PVC pipe is not allowed. When the design requires restrained joint pipe, the Engineer shall specify DIP and the design shall be in accordance with the DIP requirements or the design shall transition from PVC to DIP.

3. Ductile Iron Pipe (DIP)

a. When laying out a pipeline alignment, the Engineer shall design the pipeline using push-on joint pipe, with mechanical joint fittings. Joints for fittings shall be in accordance with the Standard Specifications and AWWA C110. Buried flange joints are not allowed because of the rigidity of the joint and corrosion of the nuts and bolts.

b. When the design of restrained joint pipe is required, the straight lengths of pipe shall have joint restraint built integrally into the bell and spigot as manufactured by the pipe manufacturer. All restrained joint pipe shall be DIP. Joint restraint at fittings and field cut restrained joint pipe shall be accomplished by the use of mechanical joint fittings and mechanical fasteners such as megalug or approved equal. The design of the joint restraint system shall be in accordance with Chapter 5, Section 5.10 “Thrust Restraint Design for Buried Piping”. In fill conditions, a change in the horizontal or vertical direction of water main by means of a fitting will require the use of restrained joints. When the thrust of a fitting is directed towards an adjacent force main, sewer main or storm drain, restrained joints shall be specified. When the thrust of a vertical bend is directed upwards, restrained joints shall be specified.

4. Prestressed Concrete Cylinder Pipe (PCCP)

Pipe joints shall be in accordance with the Standard Specifications.

G. Fittings

1. General

   a. The employment of properly designed concrete thrust blocks (buttresses and anchors) at fittings is of great importance. Details of these buttresses and anchors are shown in the Standard Details and are based on an assumed soil bearing capacity listed in the Details. Buttresses shall be employed in both restrained and non-restrained conditions. If the soil bearing capacity is less than the assumed amount, the Engineer shall either submit a design and computations for larger sized buttresses or a design with restrained joint pipe. A discussion on the design of joint restraint is presented in Chapter 5.

2. Bends

   a. The water main alignment shall minimize the use of bends. The Engineer shall try to align the pipeline by deflecting the pipe joints while adhering to the requirements of Section 3.3 B.2.e. Deflecting the joints on bends for PVC pipe is not permitted.

   b. Allowable bends are as follows: 1/8th or 45 degrees, 1/16th or 22.5 degrees and 1/32nd or 11.25 degrees.

      1/4th or 90 degree bends in the horizontal plane shall be used only with approval of the Division of Water and Sewer.

   c. Bends designed to be rotated in both the horizontal and vertical plane require special pipe restraint. The Designer must submit design calculations to the Division of Water and Sewer for review and approval. See Chapter 5, “Rotation of Fittings” for design guidelines.

   d. When the thrust of a vertical bend is directed upwards, restrained joints shall be specified and computations submitted.

3. Tees

   a. The connecting branch pipe must be ninety degrees (90°) to the mainline pipe.

   b. When connecting into an existing water main, the Division of Water and Sewer prefers cutting in new tees with valves on each branch. If allowed, tapping sleeves and valves may be used where the proposed water main is at least one pipe size smaller than the existing main to be tapped. In no case shall the proposed and existing main be the same size when using a tapping sleeve and valve. The use of tapping sleeves and valves transite pipe is prohibited.

4. Cross

   a. A cross is required for two perpendicular extensions, in close proximity, from the main pipeline. Tees shall not be used in lieu of crosses, unless the connections are spaced far enough apart. If the design requires connections on both sides of the pipeline and a cross cannot be used, the spacing between the tees shall be a minimum of ten (10) feet apart. A valve shall be installed on each branch.

5. Reducers

   a. Reducers are required for reducing or increasing the pipeline size.

6. Solid Sleeves and Mechanical Couplings

   a. Generally, mechanical joint solid sleeves shall be used for buried conditions and mechanical couplings with tie rods shall be used in vaults and structures.

   b. Solid sleeves and spacers shall be used to connect proposed underground water mains to existing underground mains.

   c. Mechanical couplings with tie rods shall be used to accommodate slight variations in above-ground pipe alignments between fixed points (ie. Wall penetrations) and the proposed pipe and fittings.

H. Relocation of Water Pipelines

1. General

   When designing the relocation of a water main, the Engineer shall consider such matters as environmental impact, maintenance of pedestrian and vehicular traffic, shutdown of customer service, constructability and system maintenance. In addition to the following, the design shall follow the requirements for water mains as stated elsewhere in these design guidelines.

2. Alignment – Horizontal and Vertical

   a. When selecting an alignment, the existing pipeline must be maintained and stay in service until the relocated pipeline is ready for final connection to the existing main. The final connection must be designed to allow a quick shutdown and transfer of services, so that water service is not disrupted for an extended period.

   b. The relocated pipeline shall have a minimum ten (10) feet, centerline to centerline, horizontal clearance from the existing main, if the existing main is to remain in service during construction of the new main.

c. The relocated alignment shall not disturb the existing blocking/restraints on the existing pipeline that is in service. Pipe restraints shall be designed for the relocated pipeline. In some cases, the design shall include the construction of thrust restraint collars on the relocated pipe with appropriate concrete cure time prior to making the connection.

d. The design of the relocated pipeline must provide for continuous service from the existing pipeline, until the relocated pipeline is placed in service. At that time, the existing pipeline shall be shutdown and all tie-ins and transfer of WHCs between the existing pipeline and the relocated pipeline shall be made.

e. The Engineer shall contact the Division of Water and Sewer for limitations on shutdowns of the existing pipeline.

f. Abandonment of the existing pipeline, structures and/or appurtenances shall be shown on the plans, indicating the limits of abandonment and description of the facility to be abandoned. See Chapter 5, Section 5.6 “Pipeline Abandonment”.

3.4 Appurtenances

A. General

There are numerous appurtenances incorporated in pipelines to ensure satisfactory and trouble-free performance and to provide a measure of control when emergency conditions prevail.

B. Valves

1. The placement of valves in a water distribution system at strategic locations is foremost in the control of the system. It is the responsibility of the Engineer to ensure that the valves are located so that minimal disruption of water service will occur during maintenance, emergency conditions and future extension work.

2. Valves shall be provided at the intersection of water mains. The number of valves shall be the same as the number of pipes at the intersection.

3. Valves shall be located at intersections in accordance with the Standard Details.

4. Valves shall be provided on mains between intersections and on dead end mains as noted below:

Main Size	Maximum Valve Spacing
6” to 12”	800 feet
16” and above	1,200 feet

5. Water zone division valves shall be provided when directed by the Division of Water and Sewer. The following information shall be provided on the drawings:

   a. Label the valve as a division valve and indicate size.
   b. Show the pressure zone lines and indicate the zone pressure on each side of the valve.
   c. Indicate if the valve shall be normally closed or open.

6. Water mains 4-inch to 24-inch in diameter shall have valves of the same size as the main. The size of valve on water mains larger than 24-inches shall be one pipe size smaller than the main if the hydraulic conditions allow.

7. Water mains 4-inch to 36 inches in diameter shall have resilient seated gate valves and comply with the Standard Specifications. Valves larger than 36-inches in diameter may be direct buried butterfly valves.

8. The pipeline vertical alignment at the valve shall be designed as nearly parallel with the road grade as possible so that the valve may be installed upright and perpendicular to the road grade. The adjusted vertical alignment at the valve shall be shown on the profile. When a valve is to be located on a pipeline that is not level, the Engineer shall check the pipe slope and depth of the valve to verify that the buried valves will be operable.

9. Valves shall be installed on each end of a sleeve or tunnel. The valves shall be set 5 feet from each end.

C. Fire Hydrants

1. Fire hydrants are another common appurtenance for which the Division of Water and Sewer has adopted standard details for installation. These requirements are shown in the Standard Details and include size of hydrant, valve and lead, location of hydrant with respect to the edge of the curb or road, valve location, bury depth and joint restraint.

   a. Location – Hydrants shall be located in a pattern approved by the Fire Chief or his duly authorized representative and shall be located so as to provide vehicular clearance from the street. Fire hydrants, where practical, shall be located at each intersection. Hydrants shall be located between intersections where necessary to comply with minimum spacing requirement. Where additional hydrants are required between intersections, said hydrant or hydrants shall be uniformly spaced from each intersection. Hydrants shall be located at the entrance to cul-de-sacs where practical. Additional hydrants shall be located along the cul-de-sacs where necessary to meet, spacing requirements and shall be uniformly spaced between the entrance and the end of the cul-de-sac. Hydrants not at intersections shall be located at a property

corner in order to avoid interference with future driveways. All fire hydrants within County Right-of-way and public drainage and, utility easements, connected to the County water distribution system, shall be owned and maintained by Harford County and shall extend from these County water mains. Fire hydrant feed lines shall be a minimum of six (6) inches in diameter and shall extend from water mains no smaller than eight (8) inches.

b. Spacing – Hydrant spacing in residential areas composed of detached or semi-detached one and two-family dwellings shall be at each street intersection of a six hundred foot (600') maximum spacing, except as approved by the Fire Chief or his duly authorized representative. In the case of shopping centers, industrial areas, building setbacks that exceed half of the minimum required spacing, multi-family units, townhouses, etc., hydrants shall be spaced no more than three hundred foot (300') apart within the public right-of-way. Special hydrants may be required by the Division of Water and Sewer as requested by a Fire Official as needed within the public right of way. All distances shall be measured along paved roadways.

c. Hydrants for Emergencies Involving Transportation Vehicles – Where streets pass over, under, or "dead end" up against the right-of-way interstate or limited access highways or railroad tracks, hydrants shall be provided. Such hydrants are to be located for fire department use for emergencies.

d. Fire Hydrants on Private Property – Fire Hydrants on private property shall be owned and maintained by the property owner. All privately owned fire hydrants shall be connected to the private main after the water meter..

e. Fire hydrants, used for draining transmission mains shall be installed at sump areas within roadways and low-lying areas off-site.

D. Cap and Blow

A cap and blow shall be installed at the end of each dead end main. Cap and blows shall also be installed at the end of water services 2" and larger which serve undeveloped properties.

E. Air Release and Vacuum Valves

1. General

   a. Air release valves and air vacuum valves are two basic types of air valves that are utilized to prevent or reduce the occurrence of air pockets and vacuum conditions, respectively, within pipelines. The two types of valves can be integrated to form a combination air valve that performs the functions of both. Air release valves contain a small discharge orifice (1/2 inch or less) that allows the escape of accumulated air under normal pipeline operating conditions. Air vacuum valves contain a large discharge orifice (1/2 inch or larger) that permit air to enter during line draining or breakage, with relatively small pressure differentials across the valves, and thus avoiding vacuum conditions and the threat of cross-contamination.

2. Sizing of Air Release valves shall be as follows:

   a. Design charts provided by the air release valve manufacturer shall be used to determine the orifice size required for an estimated rate of air release under a certain range of operating pressures. Various combinations of operating pressures and air release rates shall be considered to determine the optimum size of the air release valve. The Engineer shall provide computations in accordance with the manufacturer's guidelines. See the Standard Details for typical valve and vault configuration.

   b. The types and sizes shall be checked against the manufacturer's specification to ensure consistency between valve type, size, model number and the applicable operating pressure range.

3. Sizing of Air Vacuum Valves shall be as follows:

   a. Air vacuum valves shall be sized based on manufacturer's valve performance curves. The largest valve size shall be determined by considering normal operating conditions and a reasonable approximation of catastrophic conditions.

   b. Air vacuum valve sizing shall consider admission of air under operating conditions that generate negative pressures. These conditions may occur under normal use. For example, during the draining of the pipeline, the blow-off connection will be opened to drain the pipeline. The air vacuum valve shall be sized to admit air at the maximum, instantaneous rate of water discharging through the blow-off connection. During closure of a mainline valve, negative pressure may develop in the pipeline, downstream of the mainline valve.

c. There are also possibilities of the occurrence of negative pressure under catastrophic conditions, such as water column separation due to hydraulic transients or line breakage at a system low point. Under such conditions, it is necessary to estimate the rate at which an internal vacuum may occur. Reasonable assumptions shall be made as it is impractical to size vacuum valves using an excessively high rate of vacuum occurrence. Some manufacturers recommend using 60% of the negative pressure caused by a line break as the maximum catastrophic condition.

4. Location of the Air Release Valve, Air Vacuum Valve or Combination Air Release and Vacuum Valve shall be as follows:

The use of air release valves, air vacuum valves or combination air release and vacuum valves shall be minimized due to the susceptibility of the valves to operation and maintenance problems. The Engineer shall exercise judgment in selecting the number and location of the air release valves, air vacuum valves or combination air release and vacuum valves. The following shall be considered in selecting appropriate locations for these valves:

a. For transmission mains 12-inches in diameter and larger:

1) Air release and air vacuum valves shall be considered at all high points. House service connections shall not be used in lieu of air release valves.
2) For pipelines with a decrease in upward slope, small orifice air release valves shall be considered on the downstream, less steep side of the slope change.
3) For pipelines with an increase in downward slope, air release valves shall be considered on the downstream, steeper side of the slope change.
4) At mainline valves on transmission mains, air vacuum valves may be used to relieve negative pressures that may develop on the downstream side of the mainline valves when they are closed.
5) For pipelines where a predominant flow direction cannot be defined, air release valves and air vacuum valves shall be considered at the high points, slope changes and along long and flat pipeline profiles.

b. For distribution mains less than 12-inches in diameter:

In grid distribution systems, water service connections may be located at the high points to remove air from the system. Services designated for releasing air shall be shown on the drawings. Otherwise, the location of air release and/or vacuum valves shall be located in accordance with paragraph a. above.

5. The Standard Details indicate the air release valve and combination air/vacuum valve manhole construction details. These details shall be shown on the construction drawings. The Engineer shall complete and fill out the necessary information on these details.

   The water main and air release valve manhole shall be designed at sufficient depth to accommodate access and maintenance of the air release, air vacuum or combination air release and air vacuum valve in accordance with the Standard Details.

F. Tunnels and Casing Sleeves

Water mains crossing under State or County roads shall be installed in a tunneled or jacked sleeve if required by the State Highway Administration or Harford County. Water pipe and sleeves crossing under railroads shall be designed according to specifications of the railroad being crossed. The pipe material of the water main within the sleeve shall be restrained joint DIP.

3.5 Water House Connection

A. General

Water house connections (WHCs) provide the connections from the distribution main to the property owner's system at the property line. All services are metered. Except for the meters, the limit of Harford County Maintenance for the WHC stops at the property line or edge of easement.

B. Change in Dwelling Type

If type of dwelling unit changes after design approval, then water service connections proposed shall be revised to meet the standards of the proposed type of dwelling unit.

C. Maximum and Minimum Service Elevations

As previously noted, Harford County's water service area is divided into four (4) zones of service. The minimum and maximum ground elevations to serve each zone are shown below:

	Min. Elev.	Max. Elev.
Zone 1	0	143
Zone 2	108	285
Zone 3	263	435
Zone 4	310	482

The above service elevations are based on an objective of obtaining minimum of 28 psi and a maximum of 120 psi at the ground elevations at the top of the curb stop box. In no case, may these pressures drop below 20 psi during fire flow events, maximum day demand conditions or a combination thereof.

Lots with curb stop ground elevations greater than the maximum service elevation in each zone shall have a booster pump and hydropneumatic tank installed within the home as determined on a case by case basis (See Chapter 7). These lots shall be identified on the construction drawings on the plan view and service chart. The property owner will be responsible for ownership, installation, and maintenance of the booster pump and hydropneumatic tank.

For quality performance and compatibility with the public water system, the Division of Water and Sewer recommends the following performance requirements of booster pumps and hydropneumatic tanks:

The booster pumps shall have a minimum ¾ horsepower motor with a minimum discharge rate of 10 gallons per minute. The hydropneumatic tank shall have a minimum volume of 44 gallons. The bladder of the tank shall consist of a combination of Butyl and EPDM rubber in order to be compatible with chlorine concentrations up to 2.0 ppm. The pressure switch shall have an operating range of 40 to 60 psi.

D. Residential – Single Family and Townhomes

1. For developer projects, typically the WHC consists of a service line extending from the distribution main terminating with a curb stop at the property line. The meter is located within the home and is equipped with a radio transmitter for meter reading purposes. For capital projects or installation of WHC's to existing homes, the service line shall terminate with a meter crock at the property line. The meter will then be installed once the project is approved and the homeowner has completed all requirements of a residential application.

2. All house connections shall be configured in accordance with the Standard Details.

3. Single Family Detached dwellings shall have individual water services. Single Family Attached Dwellings (Townhomes) may have individual or twin water house connections.

4. If a water service is being designed to serve a lot in which the placement of the house may be far from the curb stop, the Engineer shall consider up-sizing the water service to overcome line losses, and a reduction in pressure.

5. Residential buildings requiring residential sprinkler systems, with one or two dwelling units shall have house connections in accordance with NFPA 13-D. The Engineer shall design the water meter size to accommodate both the domestic and sprinkler demands. The Engineer shall submit computations on the meter sizing to the Division of Water and Sewer.

   The following information shall be shown in tabular form on the construction drawings for every proposed water meter:

a. Domestic Demands

i. Number of building units
ii. Number of building units per building
iii. Normal operating demand (gpm)
iv. Peak instantaneous demand (gpm)

b. Fire Demands

i. Total sprinkler demand, gpm
ii. Fire pump demand (if applicable), gpm
iii. Standpipe demand, gpm (if applicable)
iv. Hose reel station demand (if applicable), gpm
v. Maximum flow required (sum of a, b and c), gpm

c. Proposed Meter and Backflow Preventer

i. Proposed type of size of water meter
ii. Proposed type and size of backflow preventer

It is recommended that a licensed fire protection engineer prepare or review the above information used to size the water meter.

6. Residential buildings requiring residential sprinkler systems, with more than two dwelling units shall have house connections in accordance with NFPA 13-R.

7. Service connections shall be no smaller than three-quarter inch (3/4") which is the normal size for single family homes and townhomes. At the preliminary plan stage, the Developer shall know the type of homes that will be built within the subdivision. If "luxury" style homes are proposed, the water services shall receive a minimum 1" water service with ¾" water meter be provided to a home exceeding an area of 3,500 square feet.

8. For new subdivisions, all proposed driveways shall be shown in plan view.

E. Residential – Townhouse Condominium, Garden Style Condominiums and Carriage Court Units

1. For developer projects, the WHC consists of a service line extending from the distribution terminating with a curb stop at the edge of the drainage and utility easement. The meter is located within the home and is equipped with a radio transmitter for meter reading purposes.

2. All house connections shall be configured in accordance with the Standard Details.

3. Water house connections shall either be individual or twin.

4. Residential buildings requiring residential sprinkler systems, with one or two dwelling units shall have house connections in accordance with NFPA 13-D. The Engineer shall design the water meter size to accommodate both the domestic and sprinkler demands. The Engineer shall submit computations on the meter sizing to the Division of Water and Sewer.

F. Residential – Apartment-Style Condominiums

1. Since public water mains shall be designed within condominium developments, condominium buildings shall be served by master meters located throughout the development. The Engineer shall utilize one master meter if possible. If not possible, the number of master meters shall be minimized while maximizing the number of buildings to be served. The Engineer shall layout the meters and corresponding private services to minimize crossing the public mains within the drainage and utility easements. Public fire hydrants shall only be installed before the master meter.

2. The following information shall be shown in tabular form on the construction drawings for every proposed water meter:

   a. <u>Domestic Demands</u>

      i. Number of building units
      ii. Number of building units per building
      iii. Normal operating demand (gpm)
      iv. Peak instantaneous demand (gpm)

   b. <u>Fire Demands</u>

      i. Total sprinkler demand, gpm
      ii. Fire pump demand (if applicable), gpm
      iii. Standpipe demand, gpm (if applicable)
      iv. Hose reel station demand (if applicable), gpm
      v. Maximum flow required (sum of a, b and c), gpm

   c. <u>Proposed Meter and Backflow Preventer</u>

      i. Proposed type of size of water meter
      ii. Proposed type and size of backflow preventer

   It is recommended that a licensed fire protection engineer prepare or review the above information used to size the water meter.

G. Residential - Apartments

1. Since private water mains shall be designed within apartment developments the entire apartment complex shall be served by one master meter.

2. Information shall be shown on the construction drawings in sizing the master meter similar to that for condominiums in addition to the 1,500 gpm fire flow demands after the master meter.

H. Business, Commercial and Industrial Services

1. Generally, a master meter shall be designed and placed within a drainage and utility easement adjacent to the road right-of-way. Alternatively, an inside meter setting may be installed. In this case, an inside access agreement from the Owner will be prepared as part of the Commercial Application process. In certain types of buildings, as noted below, an inside meter setting must be provided.

2. Generally, shopping centers with multiple uses shall be served by one master meter. Shopping centers that consist of more than one parcel shall have individual services to each parcel.

3. When the proposed development includes a speculative (spec) building, shell building, strip shopping center, or includes uses considered a health hazard the meter setting and backflow preventer shall be placed within the building. When an existing building is retrofitted or there is a change in the tenant or property owner, and the backflow preventer is located within an outside vault, the backflow preventer shall be relocated within the building. Specific instructions when the above conditions apply are presented in Section 4 of the Rules and Regulations. The backflow preventer shall be a reduced pressure type.

4. When a combination master meter (domestic and fire flow) is needed or requested by the developer, the developer shall install a backflow preventer and a meter adequately sized to provide reliable metering for the full range of flow conditions. The meter and backflow preventer shall be sized and specified in conjunction with the preparation of the commercial application form. The standard layout of these meter vaults is shown in the Standard Details.

5. When a developer requests, and the Division of Water and Sewer allows a separate fire and domestic master meter, the developer shall install an appropriately sized water meter and backflow preventer on the domestic water main. The fire service main shall have a backflow preventer with detector meter and/or flow meter installed as approved by the Division of Water and Sewer. The installation of the fire service line shall be configured and sized for a potential future fire flow meter.

I. Location

1. The service connections shall be indicated schematically on the construction drawings and drawn to the property line or edge of easement. Engineer shall show driveway location on the construction plans. Placement of the services shall be in accordance with the Standard Details. In existing subdivisions the exact location will be fixed in the field after discussion with the property owners.

2. Service connections with water meters 1 ½" inches and larger require a specific design for the water meter and vault including utility crossings, vault locations and easements as required. The outside edge of a vault shall not be closer than ten (10) feet from edge of a building.

3. Curb stops and water meter vaults shall not be located within sidewalks, driveways or steps.

4. Tapped service connections may not be installed on PVC water mains which were designed and/or constructed with a radius.

J. Cover

Cover over service lines must be a minimum of three feet six inches (3.5 feet) as indicated in the Standard Details, measured from established grade or finished grade, whichever is the lesser.

K. Materials

Service connection piping material and appurtenances must conform to Harford County Standard Specifications and as approved in the Harford County material list.

L. Appurtenances for Service Connections

1. Meters (Sizing)

   a. In selecting meters, determine the supply demand according to the Division of Water and Sewer fixture unit count basis as reviewed and approved by the Division. The supply demand must not exceed the "Maximum Rate for Continuous Operations" as listed in:

      AWWA C700-77 Cold Water Meters –
      Displacement Type, Table 1;
      AWWA C702-78 Cold Water Meters –
      Compound Type, Table 1;
      AWWA C703-79 Cold Water Meters –
      Fire Service Type, Table 1
      Proportions Type Main Line.

b. When Fire Service Type meters are installed, the fire demand must be determined in addition to the supply demand. The fire demand is determined according to the users fire flow requirements and must not exceed the "Safe Maximum Operating Capacity" as listed in:

AWWA C703-79 Cold Water Meters –
Fire Service Type, Table 1
Proportional Type Main Line.

2. Valves – A valve(s) and/or corporation stop(s) shall be installed on the water service in accordance with the standard details.

3. Curb Stops – Curb stops for service installation must be as indicated in the Standard Details.

4. Meter Vaults – Vaults for meter installation generally must be as indicated in the Standard Details or as directed by the Division of Water and Sewer. Existing houses shall have a meter vault installed at the property line except as otherwise directed by the Division of Water and Sewer.

M. Pressure Reducing Valves

Individual pressure reducing valves, which are privately owned, shall be installed downstream of the meter for all services. Pressure reducing valves shall be installed on all domestic service lines in accordance with the Harford County Plumbing Code.

N. Computation

The following tabulated data shall be shown for all water service connections:

2ND ZONE WATER SERVICE CHART

Lot Number	W.L. Station	Top Meter Vault Elev. @ Prop. Grade	Minimum Pressure at Top of Meter Vault Elevation	Maximum Pressure at Top Meter Vault Elevation	Type of Service	Meter Size
(Harford Avenue)						
87/88	23+60	298.73	60	104	"D"	5/8"
89/90	24+31	299.02	60	104	"D"	5/8"
71/72	24+51	298.53	60	104	"D"	5/8"
91	25+51	296.62	64	105	"S"	5/8"

O. Abandonment

When a property is developed, all unused service connections shall be abandoned at the main as directed by the Division of Water and Sewer in accordance with the Standard Specifications. The construction drawings shall note that any valves other than corporation stops, shall be removed, the service capped and encased in concrete.

CHAPTER 4

SEWER MAIN DESIGN

CHAPTER 4
SEWER MAIN DESIGN

Page No.

4.1 General **25-71**
A. Responsibility of the Designer 25-71
B. Limitations of Topics Presented in Design Guidelines 25-71
C. Abbreviations 25-71
D. Definitions 25-71

4.2 Design Criteria **25-72**
A. General 25-72
B. Pre-Design Meeting 25-72
C. Wastewater Flow Calculations 25-73

4.3 Gravity Sewer Main Design **25-74**
A. Hydraulic Computations 25-74
B. Pipeline Alignment 25-76
C. Sewer Mains: Plan 25-82
D. Sewer Mains: Profile 25-83
E. Pipeline Materials 25-85
F. Underdrains 25-86

4.4 Gravity Sewer Appurtenances **25-87**
A. Manholes 25-87
B. Drop Manholes 25-90
C. Doghouse Connections 25-90

4.5 Sewer House Connections **25-90**
A. General 25-90
B. Location 25-91
C. Size 25-92
D. Grades 25-92
E. Depth 25-92
F. Type 25-92
G. Materials 25-93
H. Alignment 25-93
I. Clearance 25-93
J. Abandonment 25-93

CHAPTER 4
SEWER MAIN DESIGN

4.1 General

A. Responsibility of the Engineer

This chapter addresses the selection and use of design criteria and practices applicable to the design of sewer collection system projects in Harford County. The subject matter discussed includes the layout of piping systems, the selection and employment of pipeline materials and the use of appurtenances. While the requirements described for the various aspects of design will include and cover the majority of conditions encountered, there is no intention to relieve the Engineer of responsibility to recognize when conditions are not favorable for the application of standards. In the preparation of the contract documents, the Engineer shall take into account such matters as environmental impact, maintenance of pedestrian and vehicular traffic, maintenance of existing and proposed utility services, constructability, system maintenance and shall produce the overall most cost-effective design. The Engineer must be continually alert to conditions that cannot be satisfied by the application of these standard criteria.

Harford County approval of the plans and specifications does not relieve the Engineer of responsibility for errors or omissions in preparing the design.

B. Limitation of Topics Presented in Design Guidelines

It is not possible to include in these guidelines all features of design and drafting, which are necessary to accomplish the development of construction documents for all projects. The topics addressed are limited to those that will help the Engineer perform most tasks in an efficient manner and comply with County practice. Although it is the Engineer's responsibility to exercise professional judgment in the acceptance or use of the standards or features of design included herein, the Engineer shall recognize that they are given to assist in the development of the project in the manner preferred by the Division of Water and Sewer. Deviations from the design standards must be brought to the attention of the Division of Water and Sewer. Waivers of the design guidelines must be justified to the Division of Water and Sewer, in writing, from an engineering evaluation standpoint that includes consideration of life cycle costs and maintenance requirements. Approval or denial of the waiver requests will be by return letter signed by the Deputy Director of the Division of Water and Sewer.

C. Abbreviations

For standard abbreviations, see Section 1.2, "Abbreviations" of these design guidelines.

D. Definitions

Average Day Flow Rate: The volume of wastewater generated in a year divided by 365 days, expressed in gpd or mgd.

Private on-site Sewer: A sanitary sewer, which conveys wastewater from a private residential, commercial or industrial structure to the public sewer. The private on-site sewer extends from the building being served to the public sanitary cleanout or sampling manhole.

Collector Sewer: A sanitary sewer constructed to transport wastewater to an interceptor sanitary sewer. A collector sewer is a public sewer main designed to serve one or more customers.

Design Flow Rate: The design flow rate shall be the sum of the peaked average day flow rate for the service area plus an infiltration and inflow allowance as described in Section 4.2 “Design Criteria” of this chapter.

Sewer House Connection (SHC): A sewer house connection (SHC) extends from the collector sewer to the public sanitary cleanout or sampling manhole located at the edge of an easement or property line.

Force Main: A pressurized sanitary sewer that conveys wastewater from a pumping station to a higher elevation in the sewer system from which gravity flow may resume.

Interceptor Sewer: A sanitary sewer used to transport wastewater from collector sewers within a drainage basin to a pumping station or treatment plant.

4.2 Design Criteria

A. General

The sizing of major components of the County sewer collection and conveyance system such as major pumping stations, force mains, and interceptor sewers are generally the responsibility of the Division of Water and Sewer.

The Master Plan generally shows the major existing and planned wastewater collection and conveyance system components. The Engineer shall be familiar with and design in accordance with the Master Plan.

The sewer design criteria presented herein shall apply to Developer and Capital Projects.

B. Pre-Design Meeting

Although it is not required, it is encouraged that prior to commencing any work, the Engineer schedule a pre-design meeting with the Division of Water and Sewer, or other appropriate agency, to discuss any topics that are particularly important in the design of the project. Pertinent topics may include any of the following:

1. Preliminary or prior engineering evaluations, if applicable
2. Development of population projections and wastewater flows
3. Sizing of major system components
4. Limit of project and future extension, if planned

5. Route selection and location of the pipe in the public right-of-way
6. Excessively deep sewer mains
7. Force main location in relation to other water and sewer utilities
7. Pipe materials and appurtenances
8. Design criteria to be used
9. Design constraints due to and anticipated interaction with existing utilities
10. Bedding requirements
11. Special topographic conditions affecting design such as slopes, streams, and floodplains
12. Special permitting issues created by the presence of wetlands, rare and endangered species, critical areas, historical and/or archaeological artifacts
13. Easement requirements
14. Conditions affecting traffic maintenance and control

C. Wastewater Flow Calculations

1. General

Population densities required for wastewater flow calculations shall be established as described in Chapter 5. All components of the sewer system shall be sized to handle the design flow rate for the ultimate drainage area within the current Development Envelope. Allowance shall be made for vacant lots and adjoining sewer service areas. The design flow rate shall be the sum of the peaked residential, peaked institutional, peaked industrial and peaked commercial flow rates for the service area plus the corresponding infiltration and inflow components within the service area.

The Engineer is cautioned not to peak the infiltration and inflow rates when determining the design flow rates since these values are fixed.

2. Residential Flow Rates

Residential average day flow rates shall be determined by multiplying the applicable population densities by the average day residential flow rate of 90 gpcd. The peak residential wastewater flow is determined by multiplying the average daily wastewater flow by the peaking factor as shown in the empirical curve published by the Maryland Department of the Environment (MDE), formerly the Maryland State Department of Health and Mental Hygiene.

3. Commercial, Industrial and Institutional Flow Rates

Commercial, industrial and institutional average day flow rates shall be determined based on 1,200 gallons per acre per day. Infiltration and inflow shall be based on the rate of 400 gallons per acre per day (acreage of the subdivision) or 40 gpcd, whichever is the lesser value.

4. Marina Boat Pump-out Facilities

The design flow for boat pump-out facilities at boat marinas shall be 25 gpd per boat slip.

4.3 Gravity Sewer Main Design

A. Hydraulic Calculations

1. General

As discussed in Chapter 2, "Engineering Reports," the Division of Water and Sewer reserves the right to determine sizing of major wastewater conveyance lines and pumping facilities, based on the Master Plan. If proposed designs require modifications to the Master Plan, the Engineer shall pursue such changes in accordance with the County Code and applicable regulations.

The Manning Equation shall be used to determine the hydraulic capacity for all gravity systems. In all cases, Manning's 'n' shall be 0.013 which is conservative for PVC pipe but accounts for potential grease build-up over time.

All proposed sanitary sewers shall meet the requirements of the Adequate Public Facility Ordinance (Harford County Code Section 267-104). The sewer system capacity shall be determined by the flow rate which the sewer mains can physically accommodate with the available hydraulic gradient. The hydraulic gradient in collector sewers shall not exceed eighty (80) percent of the pipe diameter as measured from the pipe invert. The hydraulic gradient on interceptor sewers shall not interfere with service connections or collector sewer connections.

2. Pipeline Size

a. Acceptable diameters for collector and interceptor sewers shall be eight (8) inch, twelve (12) inch, fifteen (15) inch, eighteen (18) inch, twenty-one (21) inch, twenty four (24) inch, thirty (30) inch, thirty six (36) inch, forty (40) inch, forty-two (42) inch, and forty eight (48) inch.

b. With the exception of interceptor sewers, the size of the sanitary sewer shall be sufficient to carry the design flow rate with the hydraulic gradient at 80 percent of the pipe diameter above the pipe invert. Interceptor sewers shall be designed to carry full-pipe flow. See Section 4.2.C. "Wastewater Flow Calculation" for design flow rate calculations. The design flow rate of the sewer shall not exceed the pipe capacity as noted above. Sanitary sewer designs allowing surcharging are not permitted. All sewer sizes shall be determined by the following Continuity Equation:

$$Q = AV$$

Where:
Q = quantity of wastewater in cfs (design flow)
A = required cross sectional area of sewer in sq. ft.
V = velocity in feet per second

All sewer sizes shall continually increase progressing downstream. Regardless of the slope of the downstream sewer, the pipe size shall not be decreased.

3. Flow Velocity

Pipeline velocities shall be determined by the Manning formula:

$$V = \frac{1.486}{n} r^{2/3} s^{1/2}$$

where:
V = velocity in feet per second
n = coefficient of roughness, not less than 0.013
s = slope of the hydraulic gradient in feet per foot
r = hydraulic radius = cross sectional area of liquid divided by wetted perimeter of the pipeline

The minimum slopes for sewers of various sizes shall be as follows:

Pipe Size (inches)	Min. Slope (feet per 100 ft.)
8	0.75
12	0.40
15	0.25
18	0.18
21	0.12
24	0.10
36	0.10

Laying pipes on slopes that provide minimum velocities shall be avoided whenever possible. Minimum velocities of 2.5 feet per second at design flow shall be provided whenever possible. For sewer mains 12-inch and larger, with velocities of less than 2.5 feet per second shall be permitted only with authorization of the Division of Water and Sewer. When sewer mains are flowing less than half full, the fluid velocity shall be examined on the basis of partial flow relationships and the pipeline shall be sloped to maintain minimum velocities under the design flow conditions.

Slopes producing design velocities greater than 10 feet per second shall be avoided whenever possible. Pipeline slopes exceeding 20% are permitted only with the approval of the Division of Water and Sewer. See Section 5.10, “Concrete Encasements, Arches, Cradles and Anchors” within this design manual for special anchor requirements for steep slope pipelines. If practical, suitable drop manholes or other methods of

dissipating energy and reducing eroding velocities shall be provided as approved by the Division of Water and Sewer.

In instances where the Division of Water and Sewer approves slopes less than the allowed minimum slopes, the Engineer shall add the following notes to the respective profile(s) in bold lettering:

"Note: The Contractor shall assure that the minimum slope of the sewer main shown on the above profile be no less than designed. The slope shall be computed by using the actual constructed distances between manholes and elevation differences of the manhole inverts. The survey rod must be completely plumb during readings.

If the manhole cone section prevents a plumb reading of each pipe invert then a level must be used within the manhole to project the invert for a plumb rod reading. The contractor shall have each manhole run surveyed by a Maryland-Registered Land Surveyor and the results submitted in writing to the County Inspector. A second copy shall be submitted to the Division of Water and Sewer Engineer section for verification. The Division of Water and Sewer shall approve the information submitted by the Contractor's surveyor prior to constructing any subsequent manhole runs. Constructed slopes which result in a pipe capacity less than the design flow rate or result in velocities less than scouring velocity to naturally cleanse the sewer shall be re-constructed to the proper slope before constructing any subsequent manhole runs".

B. Pipeline Alignment

1. General

The layout of a gravity sewer system of collectors and interceptors is a function of the topography. The Master Plan shows the existing and planned major wastewater facilities, along with the location of planned pump stations. In accordance with the Adequate Public Facility Ordinance (County Code Section 267-104), collector and interceptor systems shall be designed to service all areas up to the drainage area limits within the current development envelope. The plan and profile alignments of the sewer system shall provide for future connections within the drainage area limits, while minimizing both expense and modifications to the existing system.

Consideration must be given to space requirements for future utilities, particularly water and storm drains. In the absence of water and storm drain design, the Engineer shall recommend the space requirements for future water or drainage facilities and provide the necessary clearances. This requirement is particularly important at roadway intersections.

When plans of existing facilities are insufficient to accurately locate existing underground obstructions which may alter the final design, the Engineer shall perform test pit excavations during the design to uncover the subject facilities so that the horizontal and vertical positions of existing

utilities can be accurately determined. During test pitting, the Engineer shall be responsible for providing all traffic control and public safety measures necessary to locate the utilities and restore the surface. The Engineer shall coordinate the test pit operations and provide a field survey crew to physically locate the subject facility.

2. Horizontal Alignment - Location

The horizontal alignment shall take into account the following general alignment guidelines. Pipelines larger than 12 inches in diameter may have other limitations and requirements that alter these general alignment guidelines.

a. Due to the greater depth of the sewer in relation to most other utilities, the location for the sewer main shall be given first priority.

b. Sanitary sewers shall be designed with a straight horizontal alignment between manholes. Curved horizontal sewer alignments are prohibited.

c. For Developer projects, the design of the public water, sewer force mains and storm drain utilities within proposed developments shall be prepared concurrently to ensure compatibility of the utilities.

d. In new developments where sewers are constructed in advance of the road pavements, the sewer shall be placed on the lower side of the street, 7 feet from the street centerline. On curved streets, this location must be compromised, since straight horizontal alignments are required between manholes.

For road widths 24-feet or less, sewer mains shall be designed five (5) feet from the road right-of-way centerline, in lieu of the seven (7) feet stated above.

In all cases, manholes must be placed within the pavement area wherever possible. Within closed-section roadways, manholes shall not be closer than three (3) feet from the face of curb and the manhole cone section shall be rotated away from the face of curb. Manholes shall not be located within designated parking areas within townhouse and condominium subdivisions.

e. If public water and sewer mains cannot be located within the paved roadway section, the Engineer shall request a waiver of these design standards from the Division of Water and Sewer, providing reasons why the standards cannot be met.

f. For developer projects, whenever the system is planned to be extended by either future phases within the subdivision or by other parties, the sewer main shall be extended beyond the edge of paving by means of a manhole or lamphole to avoid future cutting of the pavement.

g. In existing developments with curbs, the sewer mains shall generally be located as in new subdivisions.

h. Where sewers in residential developments are constructed between or across lot lines, the centerline of the pipe shall be constructed on the lot line between lots, or along the rear property line. Generally, the sewers or required easements shall not cut across building envelopes. In cases where sewer mains are between or behind lots where access from public roads is limited, access easements from the nearest public roadway shall be provided between lots. All such easements shall allow adequate access to the sewer by maintenance personnel and equipment. See Section 5.3, "Rights-of-Way, Easements and Construction Strips" within this design manual for additional information regarding easement and access requirements.

i. In proposed subdivisions where easements are required between two adjacent lots for the extension of the sewer system, a sewer main shall be provided within the easement between the adjacent lots. The sewer main shall extend the full length of the easement between the lots.

j. In cases where a utility easement is required to be extended to the limits of the property being developed through a lot or open space to provide future service to an adjacent property, that easement shall be cleared of trees and otherwise prepared for the future extension of the main. For Developer Projects, whenever the proposed sewer system is planned to also serve an adjoining future service area, drainage and utility easements shall be provided to enable the future sewer extension.

k. Within private roads, public sewer mains shall be located within the paved roadway sections. When a sewer main can not be located within the private road, the Engineer shall obtain prior approval by the Division of Water and Sewer for its location.

l. When sewer mains are proposed to be located adjacent to existing buildings, the minimum distance away from the building foundation shall be fifteen feet, as long as the sewer depth is not greater than the bottom of the building foundation. The horizontal distance to the building shall be no greater than the depth of sewer.

m. Generally, all sewers crossing waterways shall be encased in concrete, a minimum of 6-inch thickness. Limits of concrete encasement shall extend from top of bank to top of bank. The entire manhole run which encompasses the encasement shall consist of ductile iron pipe. The design shall incorporate restoration with rip rap placed from bottom of stream to top of bank. Although, in many cases MDE guidelines require Class I rip rap, Harford County has found this size of rip rap to be insufficient

to withstand the stream velocities encountered during rainfall events. Therefore, the minimum size rip rap shall be Class II. In some cases along Bynum Run or Winters Run, the Division of Water and Sewer may require Class III rip rap.

n. Sewer mains shall not be located within stormwater management facilities. Likewise, any drainage and utility easement for a sewer main shall not be located within stormwater management facilities. These areas include but are not limited to stormwater management ponds, water quality traps, swales, rain gardens, and re-charge areas and include the associated embankments, rip-rap areas, spillway outfall channel, fenced in area or other features associated with the stormwater management facility.

o. When a sewer main is proposed parallel to or adjacent to a stream or other waterway it shall be located so that future movement of the waterway due to streambank erosion will not encroach upon the sewer main. Generally, this shall be accomplished by locating the sewer main away from the outside meander bend of the stream. If it is not possible to locate the sewer main away from the outside meander bend, the Division of Water and Sewer will only reconsider the sewer main location if the Engineer incorporates permanent streambank stabilization measures which satisfy the Division of Water and Sewer and MDE.

p. The alignment within existing roadways shall avoid high traffic volume roads if other options are available. The alignment shall be designed to allow the construction of the pipeline without the need to have road closings. When a sewer main is required to cross a Harford County road right-of-way, the Engineer, after considering the type and condition of the road, traffic volumes, disruption to traffic and possible conflicts with existing utilities shall recommend whether to open cut, tunnel, or jack and bore the utility across the roadway, on a case by case basis. The Harford County DPW Division of Engineering and Construction shall make the final decision as to the method used. The approved method shall be noted on the plans and profile.

q. Longitudinal alignments within the State Highway Administration road right-of-way shall be avoided. Approval on such longitudinal alignments must receive prior written approval from the Division of Water and Sewer.

r. In existing road right-of-ways, the alignment shall try to avoid the removal of trees or landscaped areas. In parks and public right-of-ways, where the alignment will require the removal of trees, the Engineer shall obtain the approval of the appropriate agency or agencies for tree removal. When the alignment is located outside of right-of-ways, it shall minimize disturbance to environmental features. In addition to trees, the alignment shall attempt to avoid wetlands, steep slopes and other sensitive/difficult areas to work

within. The alignment shall follow property lines to the extent practical and feasible.

s. When existing roadways are involved with the alignment, the horizontal alignment of the road must be evaluated for acceptable geometry and the sewer main designed with respect to possible roadway improvements to avoid costly relocations. The Engineer shall evaluate the plane geometry of the road with respect to movement of traffic and available right-of-way width for the accommodation of the sewer main.

t. Sewer mains proposed to cross State Highway Administration or County road right of ways must be placed within a tunnel or sleeve, if required by the appropriate agencies. DIP shall be used for the entire manhole run in applications where a tunnel or sleeve is required. The design and construction of the carrier pipe and casing pipe within railroad right of ways shall be designed in accordance with the requirements of the railroad being crossed. Manholes shall be no closer than ten (10) feet from both ends of the sleeve.

u. Sewer mains may not be located within existing or proposed wetland mitigation areas, forest retention areas or reforestation areas.

v. If the Master Water and Sewer Plan identifies a proposed interceptor or collector sewer within a proposed subdivision, the developer shall construct the proposed sewer as part of the on-site utility construction. If the sewer main must be increased in size to accommodate the remaining drainage area above and beyond that required for the subdivision, the larger size sewer main shall be constructed. If a larger size sewer main is constructed, the PWUA will discuss potential recoupments to recover the cost of the pipe size increase.

w. Sewers on 20 percent slopes or greater shall be anchored in accordance with the following schedule and in accordance with the Standard Specifications. Drop manholes are not allowed. The Engineer shall ensure that an inflatable plug can be fully inserted within the pipe.

Grades 20% - 35%
20 ft. length pipe – Anchor at each joint
13 ft. length pipe – Anchor at every other joint
Anchor spacing shall not exceed 36 ft.

Grade 35% - 50%
20 ft. length pipe – Anchor at each joint
13 ft. length pipe – Anchor at each joint
Anchor spacing shall not exceed 24 ft.

Grades > 50%
Custom Design
Anchor spacing shall not exceed 16 ft.

x. The Engineer shall show a detail on how the pipe will enter manholes for sewer slopes 20 percent or greater. The detail shall demonstrate that an inflatable plug will be capable of being inserted into the sewer with the brick channel in place. The length of sewer plugs are as follows: 6-10 inch diameter plug: 24 inch length; 8-12 inch diameter plug: 25.5 inch length; 12-18 inch diameter plug: 27 inch length.

3. Vertical Alignment

a. Grades

The vertical position of gravity sewers is determined by the rate of fall between the unit to be served and the collector sewer, by the rate of fall of the ground along the course of the pipeline and by the existence of obstructions that cannot be economically relocated. All sewer grades shall be established as to require the least excavation while satisfying minimum and maximum velocity requirements, design flow conditions, clearances, and depth requirements. All sanitary sewers shall be designed on a continuous grade between manholes.

The minimum slopes are presented in Section 4.3A.3 herein before.

Sewer house connections (SHCs) shall have the minimum slopes as discussed in Section 4.5 “Sewer House Connections” in these design guidelines.

For gravity systems, the pipeline layout is directly affected by the minimum acceptable fluid velocities as determined by the design flow, pipe size, slope and Manning roughness “n” coefficients. (See Section 4.3A Hydraulic Calculations).

Where different diameter pipes meet at manholes, the crown of all upstream pipes shall be set at the same elevation as the crown of the downstream pipe unless hydraulic gradient computations require a higher setting.

b. Sewer Depths: General

The collector sewer shall be designed at a sufficient depth to provide gravity sewer service to the basement or lowest floor level of all buildings and to cross streams and waterways with a minimum 3.5 feet depth of cover, unless otherwise directed by the Division of Water and Sewer. The minimum cover over any sewer

shall be three and a half (3.5) feet. The maximum depth of sewer shall be twenty (20) feet.

c. Sewer Depths at Stream Crossings

Where a sewer parallels a water course, the Designer shall ensure that the proposed sewer depth will be adequate to facilitate future crossings of the stream while maintaining a minimum 3.5 feet of cover over any future stream crossings.
Where sewer mains cross streams, the crossing angle shall be as close to 90 degrees as possible, and the crossing pipe shall be set at an elevation to provide a minimum of 3.5 feet of cover over the pipe measured from the bottom of the deepest section of the stream channel to top of pipe.

Inverted siphons will only be considered for interceptor sewers.

d. Sewer Depths Adjacent to Buildings

As previously noted, if sewers are parallel to an existing building, they shall be located no closer than fifteen (15) feet from an existing building foundation. This distance must increase if the building has a basement and the sewer depth is beneath the basement foundation. The horizontal distance to the building shall be no greater than the depth of the sewer.

C. Sewer Mains: Plan

1. Sewer main plans shall be drawn to a scale of 1” = 50’ or 1” = 30’

2. All proposed pipes shall be shown and symbolized as noted in the Standard Details. More specifically, the pipe is to be identified by two parallel lines with shading in between. Pipe lines 24-inches in diameter and smaller shall be shown symbolically as two-feet wide as a minimum, based on a scale of 1” = 50’. Pipe lines over 24-inches in diameter shall be shown to scale.

3. The plan location of the pipeline and appurtenances shall be carefully dimensioned so that its route is clearly identified. Dimensioning of the proposed pipeline, including appurtenances, shall be as noted in Section 5.2, “Control, Topographic and Construction Surveys”. Appurtenances shall be called by symbols and notes and dimensioned both in respect to pipeline arrangement and in respect to required positions in relation to surface features.

4. Manholes shall not be shaded. Manholes shall be numbered in consecutive order with the numbers placed within a standard circle. The numbering shall start with the connection to existing sewer. The slope of frames and covers which are proposed to flush with grade shall conform to the proposed finished grade. The type of manhole shall conform to the Standard Details.

5. All pipe sizes shall be clearly identified together with flow directional arrows.

6. The 100-year floodplain NRD, wetlands and the 25-foot wetland buffer shall clearly be shown on the plans.

7. Sewer Service Chart

   The following tabulated data shall be shown for all house and building connections.

SEWER SERVICE
(Example Only)

Lot Number	Sewer Main Station (EX MH1-MH2)	Invert at Main	Drop House Connection	Length of Service	Slope of Service	Inv. @ R/W Line	Prop. Fin. Grade @ R/W Line	Depth of Service @ R/W Line
79	0 + 23	267.98	-----	20	2%	268.38	275.00	7.0
78	0 + 27	268.41	-----	11	2%	268.63	274.13	5.5
77	1 + 01	276.38	-----	42	2%	277.22	288.75	11.5
76	1 + 10	277.35	287.96	51	2%	288.68	292.68	4.0
75	@ MH2	278.47	-----	53	2%	279.53	284.53	5.0

D. Sewer Mains: Profile

1. Profiles shall be drawn for all public sewer mains at a scale of 1” = 50’ horizontal and a scale of 1” = 5’ vertical.

2. Profiles shall be shown below the sewer plan view wherever possible. For Developer Projects, the complete layout of the piping system may be shown in the plan view drawings. Profiles shall then be shown on a separate sheet and cross-referenced to the appropriate plan sheet and street name.

3. Manholes in profile shall be numbered to correspond to the manhole numbering on the plan. The numbers shall be within a standard circle together with the manhole top elevation. The type of manhole with a reference to the Standard Detail shall be called out. The type of frame and cover shall also be called out. The top of manhole elevation and ground elevation shall also be called out. Manholes shall be numbered in consecutive order and shall start with the connection to existing sewer and shall be oriented in the same direction as the plan.

4. Profile match lines shall correspond to centerline of manhole locations.

5. Profiles Within Proposed Roads - The methods for developing sewer profiles are identical with those described for water mains with the resultant opportunity to utilize a single profile arrangement for combined water and sewer projects. As in the case of the water mains, sewer lines and manholes to be located within proposed roadways shall be projected onto the centerline of stationing of the roadway even though the true stationing is developed between manholes. This procedure means that the scaled length of the sewer lines in the profiles will not equal the true length as shown in the plan view. On a combined water and sewer project, each utility shall be projected onto the centerline road grade.

6. When a proposed sewer is located on a lot line between two lots, the limits and lot numbers shall be designated in the profile along with the street name to which the lot fronts.

7. Profiles not within Proposed Roads - In developing the profile information within or outside existing roads, the centerline of the sewer main in plan shall be used for the profile stationing, which will provide true length profiles.

8. For minimum vertical clearances see Chapter 5, “Crossings and Clearances.”

9. Utilities that cross sewer mains with the minimum vertical clearance shall be plotted to horizontal and vertical scale and identified so as to advise the contractor of their specific locations. For these utilities, stations and invert elevations shall be provided at every pipeline crossing for each pipe shown. If the elevation of the existing pipeline to be crossed is unknown or when the proposed clearance between an existing utility and the proposed utility is one foot or less, the Engineer shall arrange to have a test pit excavated to determine the exact horizontal and vertical location of the existing utility or utilities prior to submission of preliminary construction drawings.

10. When a proposed or existing storm drain parallels a proposed sewer main, the storm drain shall be shown dashed in the background of the profile.

11. For existing developed properties, the finished floor or basement elevation of the dwelling to be served shall be projected on the profile along with the elevation relative to the house connection, and to the correct vertical scale.

12. Sewer house connections into manholes shall be shown with the appropriate invert and lot number shown. All services within manholes shall have the invert match top of bench.

13. The following information as minimum requirements shall be shown on the profile:

    a. First floor and basement elevations for existing developed properties
    b. Road names
    c. Existing and proposed utilities, including storm drains
    d. Existing ground elevation line
    e. Proposed ground elevation line
    f. Bottom of stream or swale, that parallels proposed sewer
    g. 100 year flood elevation line with elevations
    h. Relocations of conflicting utilities
    i. Proposed finished road grade line
    j. Centerline of existing and proposed road crossings
    k. Date of topographical survey
    l. Centerline and name of intersecting street
    m. Limits of proposed fill and certified compaction

14. The Engineer shall clearly note that the construction of the proposed sewer may not occur until the grade is within +/- 0.2 feet of finished grade.

E. Pipeline Materials

1. General

Pipeline design practices and materials used in the Harford County Sewer System are employed to ensure maximum service capacity with the least costs of installation and maintenance.

The Engineer must be aware of the particular properties of each type of pipe so as to include or exclude the possibility of its employment under the greatest range of applications, leaving the construction contractor as many options as possible for the selection of the type of pipe to be installed. Any special design features and/or special materials required due to the specific nature of the project shall be submitted for approval to the Division of Water and Sewer.

The following table presents the pipe materials that are acceptable to Harford County for interceptor and collector sewer construction. These materials are acceptable when supplied in conformance with the material and installation requirements of the Standard Specifications and this design manual.

PIPE TYPE	MATERIAL SPECIFICATION	SIZE ALLOWED
Polyvinyl Chloride (PVC) SDR35	ASTM D 3034 ASTM F 1336	6 thru 15-inch
Polyvinyl Chloride (PVC)	ASTM F 679 T-1 wall thickness ASTM 1336	18 thru 24-incn
Ductile Iron Class 51	AWWA C151	6-inches and larger
Reinforced Concrete Pipe (RCP)	ASTM C76	24-inches and larger
Pre-stressed Concrete Cylinder Pipe (PCCP)	AWWA C301	24-inches and larger

2. Special Circumstances

   a. In addition to the types of pipe shown above, other pipe materials may be considered on a case by case basis when recommended by the Engineer and approved by the Division of Water and Sewer in writing.

   b. The Division of Water and Sewer will require the use of DIP under the following circumstances:

      1) For all open cut stream crossings. (See Section 5.15, “Pipeline Design in Wetlands, Stream Crossings and Tree Protection” for additional considerations for stream crossings.)
      2) Sewers within casing pipes or tunnels shall be DIP.

   c. In areas where significant hydrogen sulfide concentrations are expected to exist, such as downstream from a pumping station or pressure sewer discharge, hydrogen sulfide resistant pipe materials such as PVC shall be used if available in the required diameter. If PVC is not an option in the required diameter, the Engineer shall investigate other solutions such as special protective linings.

F. Underdrains

If groundwater conditions exist at the site which will be above the top of the sewer main, the Engineer shall incorporate underdrains into the design if opportunities exist to drain the groundwater to stormdrains, stormwater management ponds, or existing grades.

4.4 Gravity Sewer Appurtenances

A. Manholes

1. General

a. Within the sewer collection system, the most significant appurtenance is the manhole. Manholes are employed for several functional requirements and to ensure their ability to perform these functions, their design features have been standardized.

b. Manhole details are shown in the Standard Details. The Engineer shall use these standards as required to meet the design situation and shall designate the type on the profiles as previously noted.

c. Inverts are formed to receive future flows when the direction and grade of future connections are identified in the design process. When a future extension from the manhole is to be provided, a formed invert channel and a plugged stub shall be connected to the manhole.

d. When the pipe size entering and exiting manholes are the same, a minimum drop between invert in and invert out shall be 0.10 foot. The 0.10 foot drop shall also be within manholes with sewers with slopes less than 0.5 feet per 100 or less. The maximum drop between invert in and invert out shall be one foot eight inches (1'-8"). For pipelines of different sizes, the pipeline crowns shall be matched. For interceptor sewers the invert elevation of collector sewers and services shall match the crown elevation of the interceptor sewer. For manholes where vertical drops are required, see Section 4.4.B, "Drop Manholes".

e. Manholes located within the 100 year flood plain shall extend three (3) feet above existing grade and shall be constructed with watertight frame and covers.

f. A stainless steel insert dish shall be installed within all manholes in which the edge of cover is five (5) feet or less to the face of curb or center of gutter flow line. The construction drawings shall indicate those manholes which shall receive the stainless steel dishes. A stainless steel insert dish shall also be installed in all manholes within the vertical sump of roadways, swales, ditches, and between side lot lines. The construction drawings shall indicate those manholes which shall receive the stainless steel dishes. A stainless steel insert dish shall be installed within all manholes within the vertical sump of roadways, swales, ditches, etc. regardless of the lateral location. The Construction Drawings shall indicate those manholes which shall receive the stainless steel dishes. A stainless steel insert dish may also be required at other locations which may be determined as necessary by the

Division on a case by case basis. If a dish is proposed, then a watertight frame and cover is not required.

g. The centerline of the manhole shall be located a minimum of 3 feet from face of curb.

h. Generally, manholes located within paved and mowed areas shall be constructed to proposed finish grade. Generally, manholes located within open space areas shall be a maximum of three and one-half (3.5') feet and a minimum of two and a half (2.5') feet above existing grade.

i. Manholes located within an Open Space Area shall be constructed with a locking frame and cover.

j. Manholes shall be placed where waterways are not likely to change direction or erode the area around the manhole.

2. Manhole Location Requirements

Manholes shall be installed under the following circumstances:

a. Change in horizontal direction or vertical grade
b. Change in pipe size
c. Change in pipe material
d. Pipeline junctions
e. At spacings not to exceed 400 feet
f. At the terminal end of all sewers
g. At locations along the sewer where future extensions are planned

3. Manhole Size

The minimum inside diameter of manholes shall be four feet (4'-0") for sewers less than twenty-four inches (24") in diameter. For sewers twenty-four inches (24") and larger the inside diameter shall be increased to five feet (5'-0"). The diameter of the manhole shall accommodate a minimum 12" wide bench either side of the channel.

4. Manhole Channels

Typical manhole channels are illustrated in the Standard Details. If channeling for standard manholes is required that differs in geometry from those configurations shown in the Standard Details, the Engineer shall detail the channel on the plans, showing curve data, invert and bench elevations, bench slopes, etc. This effort shall also be provided for all manholes over 5 feet in diameter, bend structures and junction chambers. Manhole channels shall not have a centerline radius of less than 2.5 times the pipe diameter.

Where approved, manholes over twenty (20) feet deep shall have a five (5) foot inside diameter, from invert to cone section, regardless of the inflow and outflow size of sewer in accordance with the Standard Specifications and Details.

5. Interior Manhole Coatings

When required by the Division of Water and Sewer, the Engineer shall specify on the sewer profile, the use of special manhole coating materials when significant hydrogen sulfide concentration are anticipated. One example of this condition is discharge manhole for sewage force mains as presented in Section 6.12. For new manholes, the coating shall consist of a minimum 16-mil factory-applied coal tar polyamide epoxy on all interior surfaces. For existing manholes, the manholes shall first be thoroughly cleaned by means of high pressure washing (2000 psi minimum). The manhole walls shall then be lined pneumatically with Permacast by APM Permaform, high performance mix by Strong Seal, Sewper Coat by LaFarge Calcium Aluminates, or approved equal.

6. Deep Manholes

The manhole depth is defined from the lowest invert to the top of the frame and cover. If the manhole depth exceeds 20 feet, the Engineer shall take into consideration the following design requirements:

a. Provide computations to ensure floatation will not occur.

b. Verify that the groundwater pressure on the precast concrete manhole section joints will not exceed the requirements of ASTM C 443 and the Standard Specifications.

c. Verify that the groundwater pressure on the pipe to manhole connections will not exceed the requirements of ASTM C 923 and the Standard Specifications.

d. Identify any modifications necessary to the standard manhole details as a result of the manhole depth and groundwater pressure.

7. Terminal Manholes

Terminal manholes shall be constructed at the end of a sewer main which will not be extended in the future. A maximum of three (3) sewer service connections shall enter a terminal manhole. A minimum of 30° shall be provided between each service.

8. Sampling Manholes

Generally, a sampling manhole shall be provided for all lots zones CI, LI and GI at the time of utility construction for the subdivision. Previously developed or subdivided lots which do not already have sampling manholes shall have sampling manholes installed at the time of development or re-development.

9. Connection to Existing Manholes

Existing manholes to which connections are being proposed shall be rehabilitated as required so that they conform to current standards of the Division of Water and Sewer. At a minimum, existing manholes which are modified by new connections shall be watertight and structurally sound. Coring method and proposed gasketing shall be noted on the construction drawings.

Proposed sewer mains connecting to existing manholes shall be designed with the pipeline invert matching the top of the existing bench. The existing bench shall be raised to form a new channel.

B. Drop Manholes

Design details as well as maximum and minimum allowable drops are indicated for drop manholes in the Standard Details for various sewer sizes. When the drop required is less than the minimum indicated on the standard details, no drop manhole is required. In lieu of a drop manhole, the slopes of the connecting pipelines and manhole channel shall be adjusted and sloped to limit the difference between the invert in and invert out of the manhole to less than one foot, eight inches.

C. Doghouse Manholes

Doghouse manholes will only be approved by the Division of Water and Sewer on a case-by-case basis. In lieu of doghouse manholes, the engineer shall design new manholes to be cut into existing sewer mains.

4.5 <u>Sewer House Connections (SHCs)</u>

A. General

SHCs are to be provided to connect individual buildings to the collector sewer main. Unless otherwise approved, one SHC shall be allowed per lot. SHCs shall be indicated in plan and profile as described in Sections 4.3C, “Sewer Mains: Plan” and 4.3D, “Sewer Main: Profile”.

B. Location

1. The County-owned and maintained portion of sanitary sewer house connections shall be built to the property line or edge of drainage and utility easement, whichever applies.

2. For capital projects, all SHCs for improved lots shall be located so as to readily serve the basement or lowest floor of the existing dwellings or buildings in a cost effective manner. If it is not feasible, practical or economical, the Engineer shall propose first floor service in lieu of basement service. Where the location or depth of the sewer main is established by a crucial sewer house connection, this connection shall be located by the Engineer in the most advantageous position to minimize costs while providing basement service to the lot. In non-critical areas, the actual location of the SHC shall be determined by the property owner in the field prior to construction as long as it is compatible with the system as designed. However, it shall be the responsibility of the Engineer to propose a feasible location for the SHC based on the location of existing wells, septic tank facilities, topography and other features.

3. For developer projects, all SHCs shall be designed to provide basement service. If it is not feasible, or practical, or the SHC will drive the sewer main excessively deep, the Engineer shall propose first floor service in lieu of basement service. All improved properties having frontage on the collector sewer which are not a part of the proposed subdivision, but which may be served by the sewer main shall be shown on the Contract Drawings. Connections to these lots, whether negotiated by the developer or required by the Division of Water and Sewer shall be shown on the contract drawings.

4. Cleanouts shall not be located any closer to a building than the depth of the SHC at the cleanout. In no case shall the cleanout be closer than 15 feet from the structure.

5. SHCs shall not be located within sidewalks, driveways or steps. If allowed, sewer services placed within a paved area for non-residential properties shall have a lamphole frame and cover placed over the cleanout in accordance with the cleanout in paving Standard Detail.

6. When adjacent to a SHC, the entire stormwater management facility shall be shown on the plan view. The location of the SHC shall not cause the private on-site service to pass through stormwater management facilities.

7. For residentially zoned properties, if the type of dwelling unit changes after design approval, then the SHC shall be revised on the construction drawings to meet the configuration of the proposed developments.

8. If a sewer main traverses between two adjacent lots, the sewer services shall not be located adjacent to the building.

9. For new subdivisions, all proposed driveways shall be shown in plan view.

C. Size

The size of all SHCs shall be 6-inch or 8-inch diameter depending on the proposed use type and the discharge flow requirements established by the Engineer. The size of the service for condominiums or apartments shall be no less than 8-inch.

D. Grades

SHCs shall be designed for a 2% minimum grade. The maximum allowable grade for a SHC shall be 10%. Drop house connections shall be laid on a fixed grade of 2%.

E. Depth

Minimum cover over the SHC at the property line or edge of drainage and utility easement shall be three and a half (3.5) feet. Where storm drains have not been proposed or installed, SHCs shall have a minimum cover within the street right-of-way of 6 ½ feet. The maximum depth at the property line shall not exceed twelve (12) feet.

F. Type

Connections for the various types of development shall be as follows:

1. Single Family Detached and Attached – Individual sewer services.

2. Townhouse Condominium – Individual sewer service.

3. Multi-family (apartments) – Sewer service to the property line with private on-site sewers unless public sewers are required to traverse the property to serve other properties.

4. Multi-family (apartment style condominiums) –One sewer service to each building. On-site sewer mains shall be publicly owned only if the sewer mains will provide service to adjoining properties.

5. Carriage Court Units – Individual sewer services to each building.

6. Commercial – Sewer service to the property line with private on-site sewer mains unless public sewer are required to traverse the property to serve other properties.

7. Single Family – Panhandle lots – Individual sewer service connections shall extend to the edge of the road right-of-way unless otherwise approved by the Division of Water and Sewer. Publicly owned sewer mains shall extend within the panhandle lots if the sewer main is required to be extended to adjoining properties.

8. Boat Pump Out Facilities – Boat pump-out facilities at marinas shall include semi-positive displacement pumps (See Chapter 8) equipped with hour meters. The grinder pump shall be owned and maintained by the property owner. A meter agreement shall be prepared and executed by both Harford County and the property owner.

In no case shall twin SHCs be allowed.

G. Materials

SHC materials shall meet the requirements of the Standard Specifications and approved Materials List.

H. Alignment

Service connections shall be perpendicular to mains, and have no change in direction between the main or manhole and the clean out at the property line. Services entering a manhole must be placed at an angle 90 degrees or greater than the out-going sewer main alignment. In general, services entering a manhole shall be designed so that the crown of the service main matches the crown of the incoming main.

I. Clearance

a. Crossing Water Main: Clearance shall be measured between outside of pipes. Sewer House and Building Connection crossing water mains (existing or future) shall be a minimum of twelve inches (12”) clearance below water mains. Sewer House and Building Connections crossing above water main shall have a minimum 12 inch clearance and be encased in concrete ten feet (10’) each side of water main.

b. Parallel to Water House Service. Sewer house and building connections shall ordinarily be not less than seven feet (7’) horizontally from water house service and a minimum of twelve inches (12”) clear below water house services.

c. Crossing Storm Drains and Other Utilities. Sewer house and building connections crossing storm drains and other utilities (existing or future) shall have a minimum clearance of twelve inches (12”) from these utilities.

J. Abandonment

When a property is developed, all unused service connections shall be abandoned at property line. Clean outs shall be removed and water tight caps shall be installed on the service.

CHAPTER 5

COMMON DESIGN GUIDELINES

CHAPTER 5
COMMON DESIGN GUIDELINES

		Page No.
5.1	**General**	**25-94**
	A. Scope	25-94
	B. Abbreviations	25-94
	C. Definitions	25-94
5.2	**Population Projections**	**25-95**
5.3	**Control, Topographic and Construction Surveys**	**25-95**
	A. Survey Controls	25-95
	B. Topographic Surveys	25-96
	C. Construction Survey	25-98
5.4	**Drainage and Utility Easements**	**25-99**
	A. Legal Depictions	25-99
	B. Purpose	25-101
	C. Location	25-101
	D. Width	25-101
	E. Access	25-102
5.5	**Crossings and Clearances**	**25-102**
	A. General	25-102
	B. Clearances	25-102
	C. House Connections	25-103
	D. Other Utilities	25-104
5.6	**Pipeline and Manhole Buoyancy**	**25-105**
	A. General	25-105
	B. Methodology for Buoyancy Computations	25-105
5.7	**Pipline Abandonment**	**25-106**
	A. General	25-106
5.8	**Evaluating Loading Conditions on Existing Pipelines**	**25-106**
	A. General	25-106
	B. Method	25-107
5.9	**Rotation of Fittings**	**25-108**
	A. Rotation of Bends	25-108
	B. Rotation of Tees	25-108
	C. Rotation of Other Fittings	25-108
5.10	**Thrust Restraint Design for Buried Piping**	**25-109**
	A. General	25-109
	B. Alternate Buttress/Restrained Joint Design	25-109

Page No.

5.11 Concrete, Arches, Cradles and Anchors **25-110**
A. Concrete Arches/Cradles 25-110
B. Concrete Anchors for Steep Slopes 25-110

5.12 Design of Pipeline Structures **25-111**
A. General 25-111
B. Physical Characteristics 25-111
C. Design Criteria 25-112
D. Concrete Structures 25-112
E. Miscellaneous 25-113

5.13 Pipeline Design in Wetlands, Stream Crossings and Tree Protection **25-114**
A. General 25-114
B. Stream Crossings 25-114
C. Wetlands 25-116

5.14 Permits and Approvals **25-116**
A. General Requirements 25-116
B. Listing of Permits 25-117

5.15 Cost Estimates (Capital Projects) **25-119**

5.16 Landscaping **25-119**

CHAPTER 5
COMMON DESIGN GUIDELINES

5.1 General

A. Scope

This chapter contains minimum design criteria which are common to the design of both water and sewer pipelines. This chapter is intended to be used in conjunction with Chapter 3, "Water Main Design," Chapter 4, "Sewer Main Design", and "Force Main Design" under Chapter 6, to provide a complete range of topics relevant to water and sewer design. It remains the Engineer's responsibility to review the criteria presented in all the appropriate chapters and verify the applicability of all material presented as it pertains to the specific project under design.

B. Abbreviations

For Standard abbreviations, see Section 1.2, "Abbreviations" of this manual.

C. Definitions

Temporary Construction Easement: A temporary easement granted by the property owner for the use of land during the period of original construction. The temporary construction easement reverts back to the Grantor after construction and the restoration of the area is completed.

Drainage and Utility Easement: For the purpose of these Design Guidelines, a Drainage and Utility Easement provides legal permission of the property owner for the construction, ownership, and maintenance of the proposed utility across the property owner's property. The ownership of the property remains with the property owner.

Right-of-Way: For the purposes of this manual, a right-of-way is the land area designated for County or State owned roads, streets or highways.

5.2 Population Projections

Where the housing type and number is not known, the following information shall be used to determine population projections to size proposed water and sewer facilities:

RESIDENTIAL HOUSING YIELD

Zoning Districts	Typical Yield Dwelling Units Per Acre
R-1	1.8
R-2	3.5
R-3	5.0
R-4	8.0

DENSITY CALCULATIONS

Residential Classification	Density (Persons per Dwelling Unit)
Single Family Units	3.0
Townhouse Units	2.5
Apartment Units	2.5
Mobile Homes	2.5

5.3 Control, Topographic and Construction Surveys

A. Survey Controls

1. All surveys shall be in accordance with the "Maryland Standards of Practice for Professional Land Surveyors and Property Line Surveyors" as adopted March 3, 1995 and as amended.

2. Control points shall be referenced to the Maryland Coordinate System (NAD83/1991) horizontally and based on the Harford County Survey Control System. All other control points whether National Geodetic survey or State Highway Administration, shall be permitted as long as they are in the National Geodetic Survey database and are either first or second order points. All control loops to sites shall have a minimum closure of 1:15,000. For capital projects, all control points shall be referenced in the field to three fixed objects that will not be disturbed during the construction of the project. These objects shall be well identifiable points (such as a tack in a 36" Oak tree in lieu of a 36" tree). It is also desirable that these reference points be within one hundred feet of the control station where possible. All control points with their corresponding coordinate values shall be shown upon the plan sheets in their relative position to the project by scale. Values may be shown at the corresponding location of the point or in tabular form.

3. Vertical control shall be referred to the National Geodetic Vertical Datum of 1929 (NGVD ’29) or NGVD ‘88 with local reference to the Harford County Survey Control System or other designated bench marks available in the National Geodetic Survey database. A closed level loop shall be used to establish bench marks on the site using a minimum of two known bench marks to verify the elevations clearly shown and referenced in detail on the plans. For capital projects, a minimum of two (2) benchmarks shall be shown on each plan sheet. As the vertical datum has changed over the years, the Engineer shall not use elevations from as-built plans without field verification.

4. Survey baselines shall be extended for the full length of the project and a minimum of 200 linear feet beyond anticipated limits of work. Station equalities shall be shown for all common intersecting control points. Bearings and distances between control points shall be shown. Coordinates of all control points shall be either shown at the control point in a neat manner or in tabulation form on each plan sheet for which the control points occur.

B. Topographic Surveys

1. Items to Include in Topographic Surveys

   a. All buildings and other structures within and immediately adjacent to the project limits, together with all improvements, including wells, springs, septic tanks, drain fields, dry wells, etc.

   b. Property and right-of-way lines (proposed and existing) including right-of-way widths and identifying road names.

   c. Property information:
      1) Owner Name(s)
      2) Deed and recording references, including parcel number, lot number, subdivision name and record plat reference(s)
      3) Property pipes, monuments or markers
      4) Street address

   d. Roadway pavements, curb lines, driveway entrances, walkways, fences, walls, etc., including types of materials, widths, heights, and all other descriptive data.

   e. Guardrails, sign posts, retaining walls, traffic lights, and other features related to the roadway safety.

   f. Horizontal and vertical location of existing utilities including but not limited to water mains, valves, cap and blow-offs, vaults, fire hydrants, water meters, curb stops, sewer mains, manholes, cleanouts, storm drains, storm drain inlets, culverts, gas mains, utility poles, telecommunication utilities, and other located utilities. These utilities shall include those that are overhead, surface and subsurface.

g. Trees:
   1) Trees 12-inches in diameter and larger within proposed rights-of-way shall be individually located and identified by type.
   2) For existing developed properties, all trees, regardless of size, shall be located and identified by size and type that exist on the landscaped area of the property, including hedges, shrubs, flower beds, gardens, planting boxes, etc.
   3) For trees whose foliage overhangs the right-of-way or construction strip, the extent and diameter of the foliage (fall line) shall also be shown.
   4) The tree line shall be located and general characteristics of the wooded area given including approximate average size of the trees, density and general type of trees represented.

h. Water courses, such as streams, springs, swales and ditch areas, shall be shown and located including edge of water and bottom of stream/ditch elevations at the deepest section.

i. Vehicular access routes for off road or undeveloped areas shall be identified for use during construction.

j. Mail boxes.

k. Curb cuts.

l. Railroad tracks, bridges and ballast.

m. In addition to the above items, the following shall also be shown in conjunction with the topography:

   1) 100-year floodplain
   2) Natural Resource District Boundary
   3) Wetlands
   4) 25 foot wetland buffer
   5) Traverse points and references (capital projects)
   6) Existing and proposed drainage and utility easements
   7) Chesapeake Bay Critical Area Boundary

n. Identify and reference contract numbers of all existing and proposed water and sewer utilities within and adjacent to the project limits.

o. On projects requiring permanent structures (ie. pumping stations, water booster stations, etc.), the extent of the area shown outside of the anticipated property or right-of-way shall be determined by the Engineer on a case by case basis, but shall not be less than 100 feet.

p. In new developments where the terrain is being transformed, most of the information shall be obtained directly from approved plans prepared to satisfy proposed improvements including curbs, storm drains, street right-of-ways and lots as taken from the record plat and construction plans and shall show all existing features that are to remain undisturbed.

2. Method of Locating Topography

a. The method of locating topography shall be by field surveys utilizing the radial survey method, the GPS Real Time Kinematic (RTK) method or the cross-section method. Survey field notes shall be kept by means of handwritten notes in field books.

b. Aerial photogrammetry may not be used for the preparation of construction plans, unless sufficient field work is done to make any necessary adjustments to obtain satisfactory accuracy in both horizontal and vertical planes. Aerial photogrammetry shall not be utilized for capital projects. For developer projects, if aerial photogrammetry is utilized, any water or sewer alignments outside of the proposed road right-of-way for the subdivision, shall be field surveyed. The Harford County topographic information shown on the County Geographical Information System (GIS) shall not be utilized as topography for contract drawings.

c. Surveys may not be performed while snow cover is present on the ground.

3. Existing and Proposed Contour Lines

For capital projects, existing and proposed contour lines shall be shown on the plans. Sufficient information shall be obtained in order to allow the contours to be shown at 2-foot intervals or less. In areas of steep slopes (greater than 20%), contours may be shown at 5-foot intervals with the approval of the Division of Water and Sewer. For developer projects, contours do not need to be shown within the proposed road right-of-way; however, the above requirements for capital projects apply to all other areas.

C. Construction Survey

1. General

The Engineer shall provide the necessary stakeout controls on the plans for setting the alignment, both horizontally and vertically, to construct the proposed utility.

2. Water Mains

Dimensioning shall be shown by providing a table listing key points defining the alignment, including points of curvature and tangency, fittings and appurtenances with their respective stations along the pipeline and coordinate values.

Alternative:
Dimensioning of the proposed facility, including fittings and appurtenances may be made by providing right angle distance and stationing of traverse or centerline road station (in proposed roads only).

3. Sewer Mains

Dimensioning shall be shown for gravity sewers by providing a table listing the manholes with their respective numbers and coordinate values. Dimensioning shall be shown for sewer force mains and appurtenances in the same manner as for water mains.

Force mains may be dimensioned in a similar manner as water mains in Section 2 above.

4. Pumping Stations

A stakeout table listing all components of the proposed facility along with their corresponding survey coordinate locations shall be provided on the plans as presented in Chapter 6.

Alternative:
The locations of proposed facilities may be projected from a base line established from the traverse shown on the plans.

5.4 Drainage and Utility Easements

A. Legal Depictions

1. New Subdivisions

Water and sewer mains within new subdivisions are typically located within the proposed County road right-of-way within the subdivision. When water and sewer mains within new subdivisions must be extended outside of the proposed County road right-of-way, the utility shall be placed within a drainage and utility easement. These easement areas shall be shown on the record plat for the proposed subdivision. The Division of Water and Sewer will review and approve the proposed record plat after the contract drawings have been approved. The record plat shall meet the requirements of the Harford County Department of Planning and Zoning. Record plats shall be prepared on mylar.

2. SHA Road Right-of-Way

Longitudinal alignments within the State Highway Administration road Right-of-way are prohibited; however, perpendicular crossings are acceptable.

3. Existing Subdivision

Water and sewer mains traversing property within the area of an existing recorded record plat which require new easements or modification of existing easements will require a revised record plat. The Division of Water and Sewer will not approve water and sewer contract drawings until the revised record plat has been recorded and a copy is submitted to the Division of Water and Sewer. Temporary construction easements shall not be shown on a revised record plat, but instead shall require the preparation of a standard drainage and utility easement plat. Revised record plats shall be prepared on mylar.

4. Private Property

Water and sewer mains traversing private property that is not within the area of a record plat, nor within any road right-of-way shall be placed within drainage and utility easements. Information depicting the exact location of the easement shall be presented on a 8 ½" x 14" standard drainage and utility easement plat on mylar. A written deed of easement shall accompany the plat for submission to the Division of Water and Sewer for review and comment prior to the property owner signing the easement documents. For developer projects, the deed of easement shall be prepared by an attorney. For developer projects, once the plat and deed have been reviewed and approved, they will be returned to the Developer's Engineer for acquiring the necessary signatures. It will be the developer's responsibility to obtain the necessary signatures on the easement documents and to record them. Construction drawings for developer projects will not be approved until all necessary easement documents have been recorded and a copy submitted to the Division of Water and Sewer. For capital projects, once the plat has been reviewed and approved, the Division of Water and Sewer will prepare the deed of easement and will be responsible to obtain the necessary signatures and subsequent recordation.

In all cases, the deed of easement shall state the Grantor as the property owner and the Grantee as Harford County, Maryland.

Standard drainage and utility easement plats shall be prepared in accordance with the Harford County Surveyor's Standards and will be subject to the review and approval of the Harford County surveyor.

B. Purpose

The legal depiction of drainage and utility easements and the documents associated with them provide permission for the construction, re-construction, maintenance, repair and ownership of the proposed utility within the area designated on the plat. The property owner retains ownership of the land in all cases; however, the placement of landscaping and permanent structures within the easement areas is restricted.

C. Location

1. The location of drainage and utility easements shall be determined, in general, by the location and depth of the water or sewer main to be placed within the easement. Before establishing the location of the easement and associated utility, the Engineer shall consider the property owner's interests in positioning the easement within the property. Easements which split or angle across the property's building envelope shall be avoided. Easement locations shall be fixed by surveys.

2. Drainage and utility easements may not be located within landscape buffer areas, forest retention areas, forest mitigation areas, stormwater management areas (including but not limited to stormwater management ponds, water quality traps, water quality swales, rain gardens, recharge areas, embankments, rip rap areas, spillway, outfall channel or fenced in areas, or ingress/egress easements unless prior approval is obtained by the Division of Water and Sewer.

D. Width

The width of drainage and utility easements shall be large enough to ensure they are adequate to construct, access, repair and replace the utility. The topography of the utility alignment, anticipated soil conditions and required excavation depths shall be taken into consideration when easements are required. Additionally, other considerations include size of equipment and material required for the excavation and repair of the utility. Consideration shall also be given to the requirement of future pipeline installations within the same easement.

The following minimum easement widths shall be provided:

1. Sanitary sewers, force mains and water mains shall be centered within a minimum twenty (20) foot wide easement when a 12-inch and smaller water main is to utilize the same easement with a 12-inch and smaller sewer main (at nominal depths), the minimum width of the easement shall be increased to thirty (30) feet. For any larger pipe sizes, the width shall be determined on a case by case basis by the Division of Water and Sewer. Single utilities located adjacent and parallel to lot lines shall be centered within a thirty (30) foot wide easement.

2. For longitudinal alignments along but outside of SHA and County road right-of-ways, generally the centerline of utilities shall be no less than five (5) feet from the edge of a road right-of-way. The easement boundary line opposite of the road right-of-way shall be no less than 10 feet from the utility centerline. In all cases, the easement shall extend to the edge of the right-of-way for access.

3. Centerline of utilities shall be no closer than fifteen (15) feet from the edge of easements which are within the building envelope.

4. For utilities over ten (10) feet in depth, the easement width shall be equal to twice the depth of the utility with the utility centered within the easement.

E. Access

Adequate access shall be provided to the utility easement for both construction and maintenance purposes. In determining adequate access, the Engineer shall evaluate the Contractor's and County's ability to deliver the required materials and equipment to every location along the pipeline alignment without traversing through private properties. The maximum distance between access points shall be 1,500 feet unless otherwise directed by the Division of Water and Sewer. In selecting points of access, the Engineer shall avoid environmentally sensitive areas, such as wetlands, slopes over 10% and heavily wooded areas. Access shall be provided by means of a drainage and utility easement no less than 15 feet wide. For developer projects, if the Contractor requires access through private property during construction, the Developer shall be required to obtain, in writing, all rights of entry for temporary access.

5.5 Crossings and Clearances

A. General

All vertical clearance dimensions referenced in this section are measured from the outside edge of the utilities. All horizontal clearance dimensions shall be to the centerline of each utility. Where specified clearance cannot be obtained between water/sewer mains and other utilities, the water/sewer main shall be constructed in accordance with Section 5.5.E., "Waivers", of this Chapter.

B. Clearances

The following clearance criteria shall be used for water main and sewer installations:

1. Gravity sewers shall have a minimum 10-foot horizontal clearance from any existing or proposed water main. The top of the sewer shall be installed below the bottom of the water main. In cases where maintaining a 10-foot separation is not possible, the Division of Water and Sewer may allow deviation on a case-by-case basis. Such deviation may allow installation of the water main closer to the sewer, provided that the water

main is installed with a minimum vertical clearance of 6 feet above the sewer main.

2. Whenever sewers are laid within 50 feet of a private well, sewer joints shall be utilized that are capable of withstanding a 25 psi internal hydrostatic pressure. These joints shall be used from manhole to manhole. Utilizing DIP Class 52 will achieve this requirement.

3. Water mains shall maintain a minimum 1-foot vertical clearance above any sewer main at any crossing. When a water main is being designed to cross an existing sewer main/force main, it shall cross above the sewer main/force main with a minimal one-foot clearance. If it is not possible to design the water main above the sewer main/force main, there shall be a minimum one (1) foot vertical clearance below the sewer main/force main. In this case, the water main shall be encased in concrete 10 feet either side of the sewer/force main.

4. When a sewer main/force main is being designed to cross an existing water main, it shall cross below the water main a minimum of one foot vertical clearance. If it is not possible to design the sewer main/force main below the water main, there shall be a minimum one foot vertical clearance above the water main and the sewer main/force main shall be encased in concrete a minimum of ten (10) feet either side of the water main.

5. In new subdivisions, where the water main must be designed below the sewer main/force main, the sewer main/force main shall have a minimum one-foot vertical clearance from the water main and be encased in concrete a minimum of ten (10) feet on either side of the water main.

6. All concrete encasement shall be in accordance with the Standard Details.

C. House Connections

Sewer house connections (SHCs) shall be installed in a separate trench with a minimum 7-foot horizontal clearance from any water house connection (WHC). The top of the SHC connection shall be below the bottom of the WHC.

SHC and WHC may cross other utilities if a minimum one-foot vertical clearance is provided. Concrete encasement applies to the similar application s discussed in items 3, 4 and 5 above.

If two SHC's are located adjacent to each other there shall be a minimum 5 foot horizontal separation between them.

D. Other Utilities

1. When a proposed water main or sewer main/force main crosses storm drains, a minimum one-foot vertical clearance shall be provided. If it is not possible to design the sewer main/force main below a storm drain, then the sewer main/force main shall be located a minimum two (2 feet below the storm drain and be encased in concrete a minimum of ten (10) feet either side of the storm drain.

2. Consideration shall be given to the design of storm drains so water services may cross above the storm drain with a minimum 1 foot vertical separation while maintaining a minimum 3.5 feet of cover over the water services. When a culvert crosses a stream, and a water or sewer main must cross over the culvert, Harford County may require the design to insulate the water main crossing and to incorporate flexible joints to account for frost heaves.

3. The Division of Water and Sewer shall review and approve design drawings of utilities, other than water and sewer utilities, when any portion of the proposed utility is within five feet of an existing or proposed water/sewer utility. The horizontal clearance between the proposed utility and existing/future water and sewer utilities will be evaluated on a case-by-case basis by the Division of Water and Sewer. In general, the following shall be provided:

    a. Minimum vertical clearance (outside of pipe to outside of pipe) from water mains, water house connections, sanitary sewers and sewer house connections shall be one (1) foot.

    b. Minimum horizontal clearance parallel to water mains and sanitary sewers shall be five (5) feet as measured from the utility centerline.

    c. Open trenching or directional drilling shall not be allowed within eight (8) feet behind fire hydrants and water main bends.

    d. Vaults for utilities other than water and sewer utilities shall be horizontally located a minimum of five (5) feet from any water or sewer facility.

    e. Construction drawings shall note:

        1) Contractor shall be responsible for repairs from damage to any water or sewer facility in accordance with applicable local and State laws.

2) The Contractor shall, at a minimum, test pit water and sewer facilities at the following locations to determine the horizontal and vertical location of the existing utilities (test pit shall extend a minimum one (1) foot below proposed utility invert elevation: Utilities (excluding services) crossing water mains and sewers within paved section of roadway, utilities (including services) crossing all water and sewer facilities outside of the paved section of roadway.

3) Contractor shall notify Water and Sewer Abingdon Maintenance office at (410) 612-1612 of upcoming construction activities at least one (1) week prior to construction.

5.6 Pipeline and Manhole Buoyancy

A. General

All pipelines and manholes installed in saturated conditions, such as areas of high groundwater, stream crossings and floodplain areas shall be designed to prevent flotation. Pipelines and manholes will float due to buoyancy, if the buoyant force acting upward on the pipe or manhole is greater than the dead load forces acting downward on the pipe (weight of pipe, weight of dry soil, and weight of saturated soil). All calculations shall assume the pipe or manhole is empty, as during periods of non-use or cleaning.

B. Methodology for Buoyancy Computations

The following methodology should be utilized for all buoyancy computations:

1. The per linear foot weight of pipe (W_p) shall be obtained from a representative manufacturer of the pipeline material specified. If not specified, the thinnest wall pipe available for the calculation shall be used.

2. The force due to the weight of the saturated soil on the pipeline shall be calculated as follows:

$$W_{ss} = w_{ss} (H_{ss}) D$$

where:
W_{ss} = Weight of Saturated Soil (lb/L.F.)
w_{ss} = Weight of Saturated Soil (lb/ft^3)
H_{ss} = Height of Saturated Soil above Pipeline (ft)
D = Outside Pipeline Diameter (ft)

Note: A minimum saturated unit weight of 105 lb/ft^3 shall be used for w_{ss} unless soil information is available indicating otherwise.

3. The force due to the weight of the unsaturated soil above the water table on the pipeline shall be calculated as follows:

$W_{DS} = w_{DS} (H_t - H_{ss}) D$

where:
W_{DS} = Weight of Dry Soil (lb/L.F.)
w_{DS} = Average Unit Weight of Dry Soil (lb/ft^3)
H_{ss} =Total Height of Soil from Ground Surface to Pipe Crown (ft)
D = Outside Pipeline Diameter (ft)

4. The buoyant force on the pipe shall be calculated as follows:

$Ww = \pi D^2 /4 \times 62.4$

where:
W_w = Weight of Displaced Water=buoyant force upward (lbs/L.F.)
D = Outside Pipeline Diameter (ft)

5. A safety factor against pipeline flotation can be calculated as follows:

$(W_p + W_{ss} + W_{DS})/W_w = S.F.$

5.7 Pipeline Abandonment

A. General

All limits and methods of pipeline and appurtenance abandonment shall be delineated on the plans. The removal or abandonment of existing water and sewer mains shall be in accordance with the Standard Specifications.

5.8 Evaluating Loading Conditions on Existing Pipelines

A. General

The adequacy of an existing pipeline to support additional loads shall be evaluated if increased loading conditions due to change in grade or other loading conditions are anticipated. If required by the Division of Water and Sewer, the Engineer shall submit all calculations indicating design assumptions and methodologies. All evaluations shall address the adequacy of the pipeline material thickness to handle the anticipated increased loads without exceeding recommended loads or deflections for a given pipe material and thickness. All design criteria for pipe material/thickness, existing pipeline depth, pipe-bedding conditions etc. shall be based upon as-built plans for the existing utility. Working or surge pressures shall be considered in changes to loading conditions of existing pipeline If design information pertaining to pipe thickness class or bedding conditions is not available, the most conservative (i.e. weakest class or worst bedding conditions) allowed by the Division of Water and Sewer at the time of installation shall be assumed. Pipelines shall be designed with a factor of

safety of 1.25 for DIP and 1.5 for all other materials. If the depth of the pipeline cannot be determined from the plans, test pits shall be performed.

B. Method

All pipe loading analysis shall be performed based upon the industry standard for the pipe material/thickness actually installed. Table 5.7A, "Pipeline Design Standards" provides an outline for available design standards for various pipeline materials. This list is not inclusive of all pipeline materials that could be encountered. If pipelines of other material types are encountered, the Designer shall be responsible for submitting supporting documents for all required analysis.

If the evaluation of loading conditions indicates that the capacity of the pipeline to support additional loading will be exceeded, the following methods shall be investigated to determine the most appropriate method to reduce the loading on the pipe to acceptable levels:

1. Revised the loading conditions above the pipeline so that the supporting strength of the pipeline is not exceeded.

2. Upgrade the pipeline bedding conditions for the existing pipeline to decrease the loads on the pipeline to within acceptable limits.

3. Installation of a concrete arch or cradle can be used in limited situations. See Section 5.10, "Concrete Encasements, Arches, Cradles and Anchors" for limitations on concrete arches and cradles.

4. Relocate the existing pipeline to an area where loads will be decreased below the limitations of the pipeline.

5. Replace the existing pipeline with a pipe material capable of carrying the required loading conditions.

TABLE 5.7 A
Pipeline Design Standards

Pipe Type (abbreviation)	Design Standard
Ductile Iron Pipe (DIP)	AWWA C150
Reinforced Concrete Pipe (RCP)	American Concrete Pipe Association's Concrete Pipe Handbook and Concrete Design Manual
Cast Iron Pipe (CIP)	AWWA H1
Polyvinyl Chloride Pipe (PVC)	AWWA M23
Asbestos Cement Pipe (ACP)	AWWA C401
Pre-stressed Concrete Cylinder Pipe (PCCP)	AWWAC304
Vitrified Clay Pipe	National Clay Pipe Institute Pipe Engineering Manual

5.9 Rotation of Fittings

A. Rotation of Bends

1. Bends can be rotated to produce a simultaneous deflection in both the horizontal and vertical directions. All deflection angles for bends to be rotated in both the vertical and horizontal direction shall be labeled as the horizontal and/or vertical deflection angle.

2. For allowable bends see Chapter 3, “Water Main Design”.

3. When the rotation of the bend has a deflection greater than 10°, the Designer must give special considerations to restrain the horizontal and vertical components of the thrust force caused by the rotation of the bend.

4. The following formula is for the design of horizontal bends rotated in the vertical plane. The Engineer can use these formulas, with some modifications, to design vertical bends rotated in the horizontal plane.

   Cos B = (cos HD cos V cos V’) + (sin V sin V’) or
   HD = cos-1 [(cos B – (sinV sinV’)) ÷ (cosV cosV’)]
   where:
   B = Total manufacturer’s deflection angle of the bend (45°, $22\text{-}1/2^o$, or $11\text{-}1/4^o$)
   V = Vertical angle of the approaching line (incoming) of the bend with horizontal plane
   V’ = Vertical angle of the departing line (outgoing) of the bend with the horizontal plane
   HD = Horizontal deflection of the combined bend
   VD = Vertical deflection of the combined bend
   VD = V + V’ (See Note A)

   This formula is graphically depicted in the Chapter 5 Appendix.

B. Rotation of Tees

1. When the branch of a tee has a valve, the branch shall not be rotated.

2. When the rotation of the branch connection is 10° or more, the Engineer must incorporate restrained joint pipe in the design.

C. Rotation of Other Fittings

Rotation of any fittings other than bends or tees is not permitted.

5.10 Thrust Restraint Design for Buried Piping

A. General

Thrust restraint is required for all pressurized water and sewer mains where plugs, tees, bends or reducers occur. Buttresses and anchors shall be used to provide thrust restraint. Buttresses are shown in the Standard Details and are to be employed in all cases compatible with the design conditions. The Engineer shall verify that standard buttress details apply to the particular project. If required by the Division of Water and Sewer, the Designer shall prepare and submit calculations based on internal hydraulic, surge pressures and soil bearing capacities as determined by field measurements

B. Alternate Buttress/Restrained Joint Design

1. Special or Modified Thrust Blocks

Special or modified thrust block details are to be employed for conditions not covered by the Standard Details. All buttresses shall be designed based on actual soil conditions, groundwater depths and design pressures.

Horizontal bends, reducers, tees, tapping sleeves and valves (TS&V), plugs and caps shall be designed using one of the appropriate earth pressure theories available. “Design Method for Vertical Anchor Slabs in Sand”, by N. Krebs Oversen and Helle Stormann is recommended. (See pages 1481 to 1500, Performance of Earth and Earth-Supported Structures, Volume 1 Part 2, ASCE, 1972). A design concept based on bearing capacity shall not be used. For blocks in cohesive soils, the soil resistance shall be evaluated in terms of short and long-term shear strengths. The lowest resistance between the two shall be used for the design. The calculated net soil resistance for the block to be used shall be at least 1.5 times the design thrust force. Design criteria for pipe anchors for vertical bends shall neglect the weight of the earth over the pipe. The weight of the pipe and water in the pipe shall also be considered negligible for pipe 16-inches in diameter and smaller.

2. Restrained Joints

In lieu of special or modified thrust blocks, restrained joint pipe may be allowed in conjunction with the standard thrust blocks.

All design of restrained joint systems shall be in accordance with the Ductile Iron Pipe Research Association (DIPRA) Thrust Restraint Design for Ductile Iron Pipe (1997). All restrained joint designs shall have a factor of safety of 1.5. All design parameters for restrained joint designs shall be based on actual field conditions including soil types, groundwater conditions, design depths, and pipeline pressures.

Computations must be submitted for all restrained joint conditions. The limits of restrained joint pipe shall clearly be shown on the profile. The actual length of restrained joint pipe limits shall be rounded up to the next standard length of pipe or to the nearest fitting whichever is greater.

5.11 Concrete, Arches, Cradles and Anchors

A. Concrete Arches/Cradles

1. Existing Pipelines

The use of concrete arches is only allowed in situations where increased loads on an existing gravity sewer requires the upgrading of the pipeline bedding factor to increase the pipeline load carrying capacity.

The use of concrete cradles is allowable in situations where increasing the bedding conditions for an existing water line or force main is required. See Section 5.7, “Evaluation Loading Conditions on Existing Pipelines”.

The use of either a concrete arch or cradle is allowed only with the approval of the Division of Water and Sewer and if other rehabilitation methods are not practical. All design computations and details must be submitted to the Division of Water and Sewer for review and approval prior to using a concrete arch or cradle.

2. Proposed Pipelines

Concrete cradles or arches shall not be utilized for any proposed pipelines.

B. Concrete Anchors for Steep Slopes

The engineer shall consider sediment control measures on steep slopes with permanent stabilization such as stone check dams, etc. to prevent erosion over the excavated trench. Concrete anchors are required for all pipelines constructed on a grade equal to or greater than 20%. All anchors shall be installed in accordance with the Standard Details. All anchored pipelines shall be DIP. The spacing requirements for anchors shall be in accordance with the Standard Details.

5.12 Design of Pipeline Structures

A. General

The following guidelines are for the design of structures for water and sewer pipelines including structural concrete and miscellaneous metals design. These include cast in place or precast concrete structures, such as valve vaults, manholes, junction chambers, air release/vacuum valve vaults, metering vaults, entry port vaults, etc. Whenever conditions permit, the Engineer shall use the Standard Details for these structures. Structures larger than those shown in the Standard Details or structures required for unusual conditions are considered special design. These shall be designed and detailed by the Engineer using the guidelines herein. All special designs require the submission of structural calculations for approval by the Division of Water and Sewer and shall be performed by a Professional Structural Engineer registered in the State of Maryland.

B. Physical Characteristics

1. Size

   a. A minimum of 6' – 6" of headroom shall be provided inside the structure. A minimum of 2 feet shall be provided vertically between the vault floor and the bottom of the lowest appurtenance for maintenance access. The Engineer shall use these design criteria in establishing the depth of the pipeline entering and exiting the structure. The pipeline with valves, meters, entry ports, etc. shall be supported by concrete pedestals, ~~or~~ masonry columns, or approved pipe supports from the floor.

   b. The Engineer shall consider the limitations of size and weight of the structure for shipping precast structures to the site.

2. Structure Appurtenances

   a. Vaults with over 64 square feet of floor area shall have sloping floors with sump pits.

   b. The Division of Water and Sewer will determine the requirement for painting schedules of all pipelines and equipment, and coatings for the interior and exterior of the structure.

3. Location

   a. For structures requiring frequent maintenance of equipment or operation of flow control devices, the Engineer shall place the vault outside of the roadway surface, within a grassed area.

C. Design Criteria

Pipeline structures shall be designed according to the following codes and standards:

1. BOCA Building Code
2. ASTM C 890 Standard Practice for Minimum Structural Design Loading for Monolithic or Sectional Concrete Water and Wastewater Structures
3. ACI 318 Building Code Requirements for Reinforced Concrete Structures
4. ACI 350 Environmental Engineering Concrete Structures
5. AISC Code – Specification for the Design, Fabrication and Erection of Structural Steel Buildings
6. AASHTO Code
7. Aluminum Association, Aluminum Design Manual

D. Concrete Structures

1. Design methods: Per ACI 318 with special limitations in accordance with ACI 350.

2. Precast structures

   a. Design
   Precast structures shall be designed by the precast manufacturer and certified by a Professional Engineer registered in the State of Maryland. The structural computations shall be submitted for review along with the shop drawings.

   b. Lifting inserts
   Lifting inserts for precast structures/members shall be designed for four (4) times the maximum load transmitted to the inserts.

3. Buoyancy design

   The design for below ground structures shall consider the effects of buoyancy. The groundwater elevation shall be considered at the top of the structure. The structure shall be sized with a flotation safety factor of 1.1 minimum with no earth overburden or lateral component.

4. Concrete strength

   The minimum concrete strengths (f'c) of 4000 psi @ 28 days shall be used for the design and noted on the plans.

5. Steel reinforcement: ASTM A615 Grade 60

6. Structure components: All underground concrete structures shall be designed for the minimum loads indicated in ASTM C 890.

7. All concrete structures shall meet the requirements of Federal, State and Local agencies.

E. Miscellaneous

1. Steel structures

   a. The Working Stress Design Method by the AISC manual or Load and Resistance Factor Design (LRFD) may be used in the design of steel structures.

      1) Frame Structures
      Steel frames shall be wide flange, angle or channel members and designed for the load tributary area.

      2) Pipe thrust restraint system

      Tie rods shall be designed for the full thrust tensile force. ~~Lugs or~~ Thrust rings shall be designed for the full thrust force and shear. Bending moment and deflection must also be evaluated. Stress on the pipe due to welded-on thrust rings or lugs shall be checked through structural calculations.

2. Aluminum Structures

   a. Gratings

      The Engineer shall avoid the use of aluminum for gratings exposed to a corrosive environment such as a wetwell, junction box, etc. In these applications, fiberglass material shall be specified. If the fiberglass grating requires an aluminum channel, a bitumastic coating shall be applied to the channel surface which will be in contact with the concrete.

      For non-corrosive environments aluminum, gratings shall be designed or selected for 150 lb/sq.ft. loading, unless given other specific loading conditions or a higher load is expected. The span direction of the grating bearing members shall be shown on the plans. The Engineer shall follow the manufacturer's recommendations and limit the deflection to ¼" or span length L/360 whichever is smaller at the design load. Removable sections with anchoring devices shall be provided. A bitumastic coating shall be applied to the channel surface which will be in contact with concrete.

b. Frames

Aluminum fames are to be wide flange, angle or channel members and designed for the load tributary area. Allowable stress of aluminum members shall be in accordance with the Aluminum Association Specifications. Connections shall be designed and detailed on the plans using stainless steel bolts. Anchor bolts or expansion bolts embedded in concrete shall be designed for shear and tension forces.

c. Hatches

Hatches that are located in open areas adjacent to low traffic volume roadways shall be designed for an H-20 loading. Interior hatches which are protected from an H-20 loading shall have a minimum 300 lb/sq. ft. design load. The maximum deflection shall be limited to L/150.

d. Ladders

Ladders shall be designed for a 300 lb. concentrated load at the middle of the ladder rung. Rungs shall be constructed of a solid bar with serrated surface. Stringers shall be a minimum of 3/8" thick. Bracket supports for the stringers shall be provided at four (4) foot spacings. Ladders shall be in accordance with the Harford County approved material list.

5.13 Pipeline Design in Wetlands, Stream Crossings and Tree Protection

A. General

The design of pipelines requiring stream crossings and wetland disturbances shall be minimized. In particular, the installation of a pipeline within a non-tidal wetland shall be avoided if at all possible. See Section 5.13, "Alternate Installation Technologies" for installation methods that may be applicable to minimizing impacts within stream crossing and wetland areas. The Engineer shall be responsible for all permitting, coordination and other requirements established by regulatory agencies that result from wetland or stream crossing.

B. Stream Crossings

The selection of a stream crossing location shall be based primarily upon minimizing any anticipated environmental impacts as well as the ability to maintain a stabilized channel at the utility crossing location. At all stream crossings, the Engineer shall consider such items as pipe flotation, stream meandering, stream scouring and infiltration. The Engineer shall include such protective measures in the design as encasement, rip-rap, special pipe and/or joints.

Locations with severe channel instability problems shall be avoided for stream crossings. Crossing alignments shall be strategically located to minimize the adverse effects of channel instability. The following are guidelines for selecting locations for stream crossings.

1. Where sewer pipes cross streams, the crossing angle should be as near to 90 degrees as possible and the crossing pipe should be set at an elevation to provide a minimum of 3.5 feet of cover between stream bottom and top of pipe.

2. In the proximity of meandering channel bends, where stream flow velocities can severely erode channel banks and scour holes on the channel bottom, the crossing shall be placed approximately midway between two adjacent meandering bends or upstream of the meandering.

3. Abrupt drops in the stream channel bed or flow depth and riffles or localized scour holes indicate existing or potential channel bed instability. The alignment of the pipeline shall not be placed in close proximity to and especially downstream of these locations.

4. In the proximity of flow constrictions, e.g., due to bridge construction or channelization, the crossing shall be placed upstream of these locations.

5. Stream channels that show noticeable increase in channel widths, meandering, steeply sloped channel banks and lack of vegetation indicate existing or potential problems with channel widening and changes in channel position. If the pipeline alignment parallels the stream channel, a buffer width between the nearest channel bank and the limit of disturbance shall be provided. The buffer width shall be determined on a case-by-case basis. The minimum buffer width shall be 25 feet from the top of bank of the closest outside meander bend of the stream.

6. Sediment traps and storm water control ponds can drastically reduce sediment supply and increase channel bed and bank erosion in downstream channels. A pipeline crossing shall not be placed in close proximity downstream of these structures, if possible.

7. Activities such as channel dredging or cleaning can cause channel bed erosion due to decrease in flow depth and increase in flow velocity. A pipeline crossing should not be placed in close proximity upstream of these activities.

8. Alteration of the stream flow path and/or stream direction by others, due to construction activities and channel work, can drastically affect stream hydraulics. A pipeline crossing shall not be placed in close proximity upstream or downstream of these locations.

9. Where stream crossings involve tidal waters or tidal wetlands, the depth of the utility shall account for dredging in those areas with navigable waterways.

C. Wetlands

Every effort shall be made to avoid crossing wetlands when selecting the pipeline alignment. When this is not possible, the crossing distance shall be kept to a minimum. It is important that the following items are considered in the design of a pipeline in wetlands.

1. Disturbance to the wetlands during construction shall be kept to a minimum and the native material excavated out from the wetland shall be placed back as much as possible. Excess material and construction debris should be disposed outside of the limits of the non-tidal wetland buffers and the 100-year flood plain.

2. Temporary construction structures, staging areas, and stockpiles shall not be located within the limits of the non-tidal wetland buffers or the 100-year flood plain.

3. Proper bedding and side support materials shall be provided for the pipe.

4. In addition to the above, the Engineer shall follow the latest guidelines of the MDE's "Best Management Practices for Work in Non-Tidal Wetlands and Wetlands Buffer". These practices shall be placed on the plans as directed by the Harford County Soil Conservation District. If the Engineer elects to use stone bedding, as the guidelines suggest, the Engineer shall design a means of blocking the seepage of groundwater along the pipeline at sufficient intervals to prevent the draining of the wetland (i.e., clay trench dams).

5.14 Permits and Approvals

A. General Requirements

Upon completion of the plans and specifications for a project and before construction can be authorized, authorization and approval must be received from all governmental agencies who have jurisdiction over the project. These approvals take the form of permits. Very often the permits issued by an agency are contingent upon construction details and conformance with design features and working conditions that may require modifications to the normal plans and specifications. Generally, the Engineer shall be responsible for obtaining all necessary permits. Permits required for a project may include but not be limited to the following:

B. Listing of Permits

1. Soil Erosion and Sediment Control:

   Construction plans must be reviewed and approved by the Harford Soil Conservation District for compliance with the "Maryland Standards and Specifications for Soil Erosion and Sediment Control".

2. Stormwater Management:

   Construction plans must be reviewed and approved by the Department of Public Works for compliance with the County's Stormwater Management Regulations.

3. Wetlands, Waterways and Floodplain:

   a. Projects involving impacts to the 100-year floodplain as defined by the Federal Emergency Management Agency (FEMA) Flood Insurance Rate Maps (FIRMS) and/or Harford County authorized floodplain studies require review and approval by the Harford County Department of Planning and Zoning and the Maryland Department of the Environment (MDE), Wetlands and Waterways Program.

   b. Projects that impact waterways, streams, Waters of the United States, tidal and non-tidal wetlands must be authorized by the Maryland Department of the Environment and the U.S. Army Corps of Engineers. The State of Maryland also regulates a 25-foot non-wetland buffer, extending 25 feet landward of the wetlands boundary. Water and sewer projects with temporary impacts are generally authorized under the "Maryland State Programmatic General Permit (MDSPGP-1) by the MDE, Wetlands and Waterways Program. MDSPGP-1 projects usually do not require independent review by the U.S. Army Corps of Engineers. In some circumstances these projects will be authorized individually by the Baltimore District of the U.S. Army Corps of Engineers.

   b. Wetlands must be reported in accordance with all County Code and Land Development Regulations.

   c. To satisfy all wetland permits, the wetlands must be delineated in the field and validated by the permitting agency.

4. Forest Conservation:

   Projects involving the removal of trees must be reviewed and approved for compliance with the Harford County Department of Planning and Zoning.

5. Non-Point Pollutant Discharge Elimination System:

   Projects involving "construction activity including clearing, grading and excavation activities except: operations that result in the disturbance of one acre or more of total land areas which are not part of a larger common plan of development or sale" must file a Notice of Intent (NOI) form to the MDE Water Management Administration to comply with the "General Permit for Construction Activity for Stormwater Discharges".

6. MDE Water/Wastewater Construction Permit Application:

   The following major water and wastewater facilities require a permit from the MDE Water Management Administration:

   a. Major Water Facilities: water mains larger than 15-inch diameter, booster stations with average daily flow greater than 5,000 gpd, elevated tanks, storage tanks, water treatment facilities and utilization of well water for public water supply.

   b. Major Wastewater Facilities: gravity sewers larger than 15-inch diameter, pumping stations with average daily flow greater than 5,000 gpd, force mains, and wastewater treatment facilities.

7. Grading Permit: A grading permit issued by the Department of Public Works will be required before construction starts.

8. Depending on the particular project, a permit may also be required from the Maryland State Highway Administration and the various public utility companies such as electric, telephone, cable, railroad and pipeline companies.

9. Traffic Control: The Engineer shall develop a traffic control plan and shall receive approval from the State Highway Administration and/or Harford County Department of Public Works whenever the proposed construction is within an existing public road right-of-way.

10. Utility Access: All projects proposed within the County road right-of-way require a Harford County DPW Utility Access Permit. The Engineer shall note if the permit requires the use of flowable fill, the Engineer shall first consult with the Division of Water and Sewer since flowable fill is not permitted by the Division of Water and Sewer within County road right-of-ways.

11. Critical Area Consistency Report: Projects within the critical area boundary as designated by the Harford County Department of Planning and Zoning shall include the preparation of a critical area consistency report with review and approval by the Department of Planning and Zoning.

5.15 Cost Estimates (Capital Projects)

The Engineer shall prepare an opinion of probable cost for the construction of the project at the conclusion of each design phase. The cost estimates shall be progressively more precise and comparable to the level of design at each of the design phases, including a bid estimate based on final construction documents.

5.16 Landscaping

If a drainage and utility easement is proposed or currently exists, the planting of trees within the easement is prohibited. Within the County or SHA road right-of-way, planting of trees within 10 feet of water and sewer facilities is prohibited. Ornamental shrubs may be approved within the above restrictions with prior approval by the Division of Water and Sewer. In no case shall the landscaping prevent access for the repair, reconstruction or maintenance of the water or sewer facility, nor shall the landscaping cause subsurface damage to the utility.

CHAPTER 5
APPENDIX

- **Vertical – Horizontal Pipeline Deflection Chart**

CHANGE IN VERTICAL PLANE CORRESPONDING TO A CHANGE IN HORIZONTAL PLANE

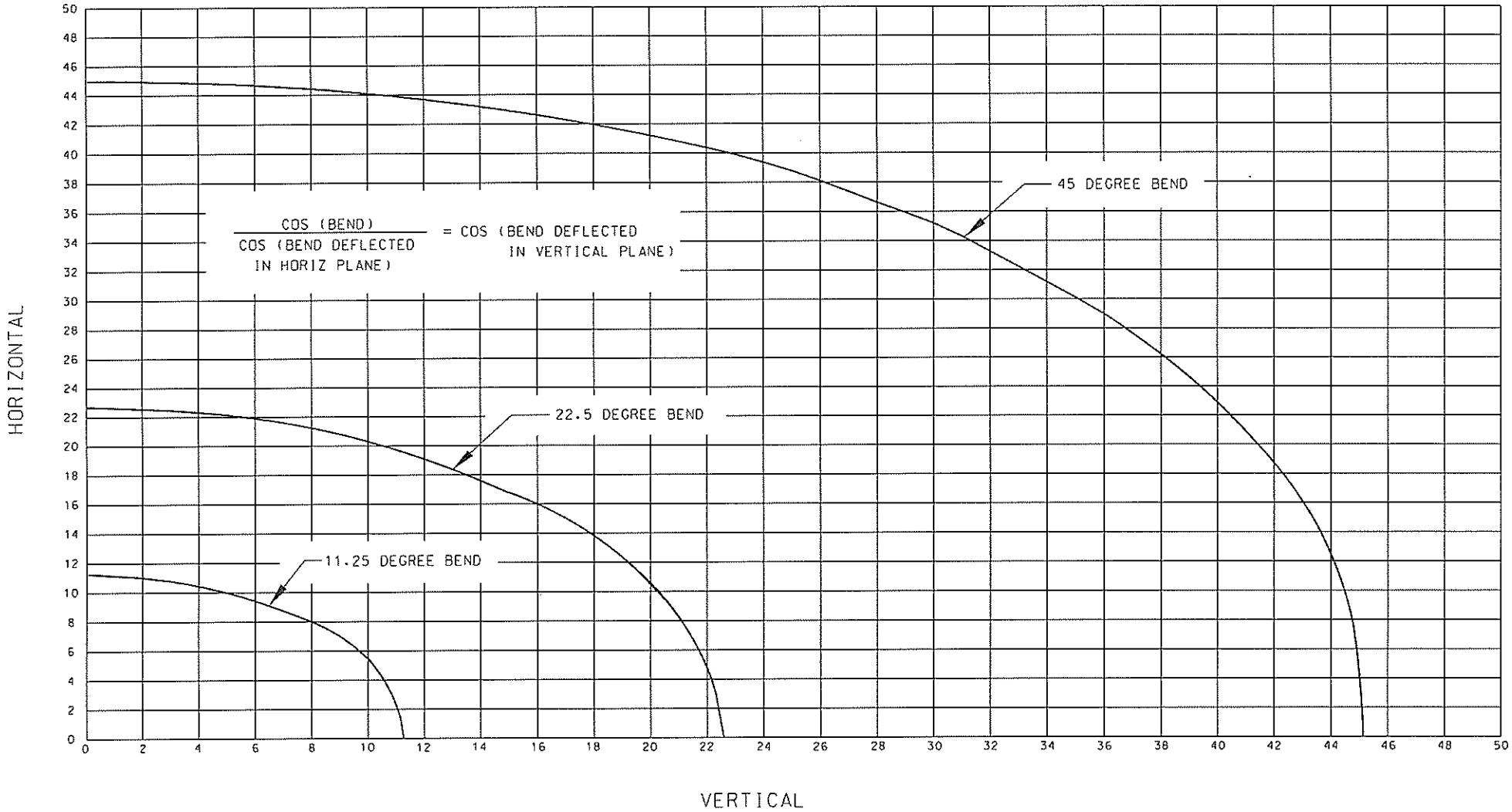

HARFORD COUNTY, MD DEPARTMENT OF PUBLIC WORKS	DESIGN GUIDELINES VERTICAL - HORIZONTAL PIPELINE DEFLECTION CHART	APRIL 2006

CHAPTER 6

WASTEWATER PUMPING STATION AND FORCE MAIN DESIGN

CHAPTER 6
WASTEWATER PUMPING STATION DESIGN

Page No.

6.1 General **25-121**
A. Responsibility of the Engineer 25-121
B. Policy 25-121
C. Harford County Project Facilitator 25-122
D. Construction Drawings 25-122
E. Contractor Pre-Qualifications 25-122

6.2 Abbreviations **25-123**

6.3 Definitions **25-123**

6.4 Regulations **25-123**

6.5 Permits and Approvals **25-123**

6.6 Design Phases for Developer Projects **25-123**
A. Preliminary Engineering 25-123
B. Pre-Design Meeting 25-124
C. 95% Design Submittal 25-124
D. 100% Design Submittal 25-125
E. Pre-Construction Meeting 25-125

6.7 Design Phases for Capital Projects **25-125**

6.8 Types of Wastewater Pumping Stations and Selection **25-125**
A. Submersible 25-125
B. Suction Lift 25-126
C. Package Wet Well/Dry Well 25-126
D. Built-in-Place Wet Well/Dry Well 25-127

6.9 Hydraulic Computations **25-127**
A. Design Flow Rate 25-127
B. Number of Pumps 25-127
C. Hydraulic Analysis 25-127
D. Pump and System Curves 25-128
E. Water Hammer 25-128
I. Pump Selection 25-128

6.10 Design Criteria to be Shown on Construction Drawings **25-129**
A. Projected Wastewater Flows 25-129
B. Pumping Unit 25-130
C. Address 25-130

Page No.

6.11 Pumping Station Design **25-131**
A. Site Design 25-131
B. Structures 25-136
C. Equipment 25-141
D. Electrical and Controls 25-144
E. Painting and Coating 25-155
F. Safety Systems 25-156
G. Odor Control 25-156
H. Spare Parts 25-156
I. Posting of Signs and Tags 25-156
J. Shop Drawing Submittal 25-156
K. Operation and Maintenance Manual 25-157
L. As-Built Drawings 25-158
M. Pump Vibration Test 25-158
N. Pump Drawdown Test 25-158
O. Pump Station Abandonment 25-159
P. Pump Station Upgrades & Retrofits 25-162

6.12 Force Main Design **25-163**
A. Hydraulic Calculations 25-163
B. Force Main: Plan 25-163
C. Force Main: Profile 25-164
D. Pipeline Materials 25-165
E. Types of Joints/Fittings 25-165
F. Clearances 25-165
G. Appurtenances 25-166
H. Water Hammer 25-166

CHAPTER 6
WASTEWATER PUMPING STATION DESIGN

6.1 General

A. Responsibility of the Engineer

This Chapter addresses the selection and use of design criteria and practices applicable to the design of sewage pumping station projects in Harford County. The subject matter includes the circumstances in which the Division of Water and Sewer will consider sewage pumping stations, the layout of pumping station sites and force main alignments, the selection and employment of pipeline materials, mechanical pumping equipment, ventilation systems, control building, electrical supply and systems, controls and instrumentation and SCADA and associated ancillary work for a complete system. While the requirements described for the various aspects of design will include and cover the majority of conditions encountered, there is no intention to relieve the Engineer the responsibility to recognize when conditions are not favorable for the application of standards.

Harford County approval of the plans and specifications does not relieve the Engineer of the responsibility for errors or omissions in preparing the design. In particular such issues may include but not be limited to pump capacity, water hammer, cavitation, surge pressures, electrical conditions, buoyancy, instrumentation and telemetry.

B. Policy

1. It is the policy of the Division of Water and Sewer to promote the use of gravity sewer systems to the extent practical and feasible due to the reliability and low maintenance associated with gravity sewer systems. Sewage pumping stations will not be considered as a method of providing sewer service that could otherwise be furnished by conventional gravity sewer with depths equal to or less than 20 feet and with acceptable slopes.

2. If a developer or his Engineer wishes to utilize a sewage pumping station for which the subdivision could be served by conventional gravity sewer, a formal request shall be made in writing to the Deputy Director. Along with the request, the Engineer shall submit an Engineering Evaluation that proves the economic impact of the sewage pump station is less of a financial burden to Harford County than a conventional gravity sewer system. A 30-year present worth cost analysis shall be performed in comparing the costs of the two different systems. The present worth cost shall include the following maintenance costs: electrical costs, routine weekly maintenance, labor, replacement of parts, etc. The Division of Water and Sewer shall review and approve the 30-year cost analysis. Sewage pumping stations will only be considered if (1) the 30-year present worth cost of the pumping station is less than the gravity system, (2) the site does not require conventional gravity sewer to be extended beyond the subdivision (ie. The property is at the edge of the

development envelope of drainage basin) and (3) the property is not designated in the Master Water and Sewer Plan or Rules and Regulations as requiring a sewage pumping station. Environmental constraints and topographical conditions may also be taken into consideration in the above evaluation.

3. In accordance with the Adequate Public Facility legislation, newly proposed sewage pumping stations for developer projects and capital projects shall be sized to handle the design flow at ultimate build-out conditions within the Harford County-approved drainage basin. The equipment pads, electrical systems and equipment, ventilation, and dry well and wet well size shall be designed for this ultimate condition. If the proposed design flow from a developer project is fifty (50) percent or less than the design flow at ultimate build-out conditions and the remainder of the ultimate flow is not from current Harford County customers, then the pump impeller and motors may be sized to handle no less than seventy five (75) percent of the design flow at ultimate build-out conditions, with provisions for impeller/motor changes in the future.

C. Harford County Project Facilitator

The Division of Water and Sewer has assigned an engineer to be the project Facilitator for developer-built pumping stations. The role of this staff member is to facilitate and expedite Harford County's technical review and approval of the design and to coordinate the County construction approval process. The assignment of the project facilitator in no way relieves the Developer or Developer's Engineer from properly managing and coordinating the construction of the pump station and associated schedule so that the pump station will be fully tested and operational prior to any plumbing connections required. All technical matters related to the design and construction shall be first directed to the developer's engineer and the developer's engineer shall immediately inform the project facilitator. Standard operating procedures have been developed for the construction approval process. The most current version of this document shall be included within the specifications.

D. Construction Drawings

The sewage pumping station and force main shall be on the same set of construction drawings, separate from other water and sewer construction drawings.

E. Contractor Pre-Qualifications

For developer projects, the Engineer shall note in the specifications the following: The selected Contractor shall be pre-qualified with the Harford County Department of Procurement, under Section M, Pumping Stations. The selected Contractor shall not assign the Contract. All major subcontractors involved with the major mechanical, electrical, and structural components of the station must also be pre-qualified with Harford County for their respective responsibilities (ie. E-4 Electrical, E-5 Mechanical, E-8 Pre-engineered buildings, and E-9 Reinforced Concrete).

6.2 Abbreviations

Abbreviations used in this chapter or other chapters are located in Chapter 1 of this manual.

6.3 Definitions

Design Flow Rate: The design flow rate is the peak demand volume for the service area plus the infiltration and inflow (I/I) allowance, expressed in gpm or mgd. The calculation of the design flow rate requires the computation of the average day rate for the facility, the application of an appropriate peaking factor, plus the appropriate I/I, as described in Chapter 4.

6.4 Regulations

Wastewater pumping stations must satisfy the regulations of agencies having jurisdiction. Wastewater pumping stations shall conform to the "Design Guidelines for Sewerage Facilities", 1978 edition or latest addenda or edition as published by the Maryland Department of Health and Mental Hygiene, now the Maryland Department of the Environment (MDE). Buildings shall comply with applicable BOCA and Harford County building code requirements as well as any permitting requirements of the Harford County Department of Planning and Zoning (DPZ) and the Department of Inspections, Licenses, and Permits (DILP). Other regulations governing facilities and construction shall be adhered to, including regulations published by the Maryland Occupational Safety and Health (MOSH), the National Fire Protection Association (NFPA), National Electric Code (NEC), Harford County Plumbing Code and others as applicable.

6.5 Permits and Approvals

See Section 5.15, "Permits and Approvals" in this manual for applicable permit requirements. In addition, for any above ground structure, the Developer or his designated Engineer shall make all applications for and obtain the required building and grading permits.

6.6 Design Phases for Developer Projects

A. Preliminary Planning

Prior to Preliminary Plan approval, the Engineer shall prepare a detailed drainage area study, in accordance with the requirements in Chapter 2, Engineering Evaluations, for review and approval by the Division of Water and Sewer. The engineering evaluation shall include a property-specific topographic map indicating all of the properties to be served by the proposed pumping station. The evaluation shall include computations showing the derivation of the proposed and ultimate design flows. Upon request, Harford County will supply GIS information to assist the Engineer. The pumping station service area shall include the portion of the drainage area within the current development envelope. The proposed pump station shall meet all requirements of the Adequate Public Facilities Ordinance (Harford County Code Section 267-104).

B. Pre-Design Meeting

Prior to commencing the design for the sewage pump station, the engineer shall hold a pre-design meeting with the appropriate sections of Division of Water and Sewer to review the following:

1. Pump station and force main site location and access
2. Type and size of pumping station
3. Design Criteria
4. Review standardization of equipment and materials
5. Review standardization of information included in the plans and specifications.
6. Review submittal requirements

C. 95% Design Submittal

1. When the plans and specifications are 95% complete, the Engineer shall submit seven (7) sets of paper prints and three (3) sets of specifications to the Division of Water and Sewer for review and comment. The Engineer shall also submit the following computations in the form of an Engineering Evaluation:

    a. Derivation of the design flow
    b. Determination of force main velocity at the design flow
    c. Wet well sizing (required and provided)
    d. Intake submergence (required and provided) to prevent vortexing
    e. Wet well ventilation and odor control
    f. Tabulation of data to develop the system curve
    g. Copy of proposed manufacturer's pump curve
    h. NPSH (Available and required) Provide a copy of the pump manufacturer's NPSHR data.
    i. Wet well buoyancy calculations
    j. Dry well buoyancy calculations
    k. Water hammer calculations

2. The plans and specifications shall present complete, bid-ready plans and specifications.

3. The Division of Water and Sewer engineering, maintenance and operations will review and comment on the plans and specifications. Once the review comments have been submitted to the Engineer, the County Project Facilitator will schedule a meeting with the Engineer to discuss the comments.

4. If in the judgment of the Division of Water and Sewer, the submittal is lacking sufficient to detail expected in a 95% submittal, the drawings will be returned to the Engineer.

D. 100% Design Submittal

1. Once all of the 95% County comments have been addressed, the engineer shall submit the 100% mylars along with the original mark-ups, with one set of 100% specifications.

2. The Division of Water and Sewer will coordinate and track the review and signature of the 100% mylars and specifications.

E. Pre-Construction Meeting

Prior to the pre-construction meeting, the Engineer shall distribute 7 sets of plans and specifications to the Division of Water and Sewer.

6.7 Design Phases for Capital Projects

The design phases for capital projects shall be in accordance with the Engineer's scope of services.

6.8 Types of Wastewater Pumping Stations and Selection

Harford County's wastewater pumping stations are divided into four categories: submersible, suction lift, package wet well/dry well and built-in-place wet well/dry well. The description and application of each of these stations is presented below:

A. Submersible

1. Submersible pump stations have pumps and motors housed in a common watertight enclosure which are placed in the wet well below the water level. The pumps are raised and lowered by means of a stainless steel cable attached to the pumps which are guided through a stainless steel guiderail. When placed at the bottom of the guiderail, the weight of the pump and motor maintains a tight seal at the seating flange which is connected to the force main. The sewage is pumped through a stainless steel force main within the wet well where it then passes into an adjacent vault which contains a check valve(s) and a magnetic flow meter. Typical submersible pump station layout and details are provided in the Chapter 6 Appendix.

2. A submersible pump station may be considered if the design flow rate is less than 0.05 mgd and the motor horsepower is 15 hp or less.

B. Suction Lift

1. Suction lift pump stations have pumps and motors housed above ground, situated on top of the wet well. The suction piping for each pump is suspended from each pump and terminates below the wet well water level. Since the pumps are above the water level in the wet well, they must be primed at all times by means of vacuum pumps. Suction lift pump stations come pre-fabricated by the pump manufacturer. The pumps shall be situated on a ½-inch thick steel plate, which sits on top of the wet well. The force main is connected to the pump discharge and passes back down into the wet well where it penetrates the wet well and then enters a vault which houses a magnetic flow meter. All piping shall be ductile iron. A fiberglass enclosure houses the above-ground equipment. Typical suction lift pump station layout and details are shown in the Chapter 6 Appendix.

2. A suction lift pump station may be considered if the design flow is less than 2.0 mgd, where the ultimate motor size does not exceed 40 hp and where the total suction lift is 15 feet or less.

C. Package Wet Well/Dry Well

1. Package wet well/dry well pump stations are pre-assembled by a single pump manufacturer/integrator and erected on-site by the Contractor. The pumps and motors are housed within the dry well which consists of a cylindrical pre-cast concrete structure at a depth equal to the wet well to enable a flooded suction condition. Access into the dry well is provided by means of a 4-foot diameter entrance-way which leads to the dry-well chamber. The suction and discharge piping consists of ductile iron pipe. The environment within the dry well must be controlled with ventilation and a dehumidifier. Potable water shall be provided within the dry well by means of a hose bib for cleaning and maintenance purposes. A sump pump shall be provided to handle washdown water. A magnetic flow meter shall be installed on the force main before it penetrates the ceiling of the dry well. Typical package wet well/dry well pump station layout and details are provided in the Chapter 6 Appendix.

2. A package wet well/dry well pump station may be considered if the design flow rate is less than 2.0 mgd but greater than or equal to 0.05 mgd and the ultimate motor horsepower will not be greater than or equal to 100 Hp.

D. Built-in-Place Wet Well/Dry Well

1. Built-in-place wet well/dry well pumping stations are completely constructed on-site. The wet well and dry well are constructed of cast-in-place concrete. The control building is situated at grade level overtop the dry well. Typically, the pumps, motors, HVAC, flow meter, controls and electrical equipment are all housed in the dry well sub and super structure. Generally, bathrooms with a sink and toilet are provided in built-in-place pump stations. Rails, electrically operated cranes and hoists are provided to facilitate the removal of the pumps, motors and other heavy equipment. The architectural treatment of the exterior of the superstructure as well as landscaping shall compliment the architectural style and landscaping with the surrounding neighborhood. Typical built-in-place wet well/dry well layout and details are not provided, as the design of these type of pump stations are very complex and is beyond the scope of these design guidelines.

2. A built-in-place wet well/dry well pump station shall be considered when the design flow is greater than or equal to 2.0 mgd and/or the pump motor horsepower is 100 Hp or greater.

6.9 <u>Hydraulic Computations</u>

A. Design Flow Rate

Wastewater pumping stations must be capable of pumping the design flow rate. The design flow rate is the peak flow rate for the service area within the development envelope plus the I/I allowance. The design of wastewater pumping stations must consider existing and projected peak flow rates. Wastewater pumping stations shall be designed to pump the peak flow for existing and future users plus the I/I allowance. Flow rate computations shall follow guidance given in Chapters 4, “Sewer Main Design”, and Chapter 5, “Common Design Guidelines” of this manual.

B. Number of Pumps

Wastewater pumping stations shall be capable of pumping the design flow rate with the largest single pump out of service.

C. Hydraulic Analysis

Wastewater pumping stations must satisfy the hydraulic conditions of the proposed system. The Engineer shall perform a complete hydraulic analysis of the wastewater pumping station. In accordance with the Adequate Facilities Ordinance, all receiving facilities downstream of the proposed pumping station must be analyzed for their available capacity. The hydraulic analysis shall consider potential impacts on existing force mains, gravity sewers and pumping stations when the new pumping station is added to the system. The end of this Chapter presents the force main design requirements and analyses that must be

performed in conjunction with the pumping station design. Wastewater pumping stations shall be designed to operate at the appropriate discharge head and flow rate.

D. Pump and System Curves

The system curve, which is particular to the proposed pumping station and force main, based on the static head and dynamic head (frictional losses based on the size of pipe, including minor losses), shall be developed by the Engineer. The system curve shall be carefully plotted for both a Hazen-Williams C-Factor of 120 and 140. Although the design shall be based on a C-Factor of 120, the system curve at 140 is used as a possible indication of initial pump station operation. The system curve will become the basis in choosing an acceptable pump. The selected manufacturer's pump curve shall be carefully plotted on the system curve. The intersection of the two curves results in the proposed pump capacity of the selected pump. The Engineer shall avoid choosing pump curves that are relatively "flat" in which a minor change in the static or dynamic head will result in a significant increase or decrease in flow.

E. Water Hammer

The Engineer shall evaluate if water hammer or damaging pressure surges will result from the closing of the check valve(s) on the force main and appurtenances. Water hammer is typically a concern under high static head conditions. The Engineer shall incorporate special provisions in the design to overcome the surge pressure if the combined effects of static head and water hammer do not exceed the design working pressure of the weakest component in the piping system by a safety factor of 1.1. In such circumstances, the Engineer shall re-evaluate pipe size and velocities, or select an appropriate device to control the water hammer. Such devices may include hydraulically operated, time adjustable, pump check service valves and spring-type, oil-cushioned elbow hydraulic surge relief valves.

F. Pump Selection

The Engineer shall provide a proper wet well design and suction line design in accordance with the Hydraulic Institute Standards to avoid vortexing and cavitation related problems. The Engineer shall perform a net positive suction head available (NPSHA) analysis and include this information in the pump specification. The NPSHA shall be calculated for the expected design flows and shall exceed the pump manufacturer's requirements by an added margin of safety of not less than five (5) feet. Pumps shall be selected to have their maximum efficiency at the operating point. Under no circumstances shall a pump be specified to operate at very low flows and high heads, near shutoff heads, or "runout" conditions (maximum possible flow rate of the pump). These conditions can result in excessive hydraulic loading or cavitation damage to impellers, casings and shafts, rapid bearing and mechanical seal wear, and high vibration. As previously noted, the Engineer shall avoid the selection of pumps whose curves are flat (i.e. small changes in head resulting in large changes in flow rate).

6.10 Design Criteria to be Shown on Construction Drawings

The following design criteria shall be shown on the Contract Drawings:

A. Projected Wastewater Flows

1. Average Flow

   a. Residential

      i. Breakdown of number of units, by type and phase.
      ii. Total projected contributing population based upon total number of units.
      iii. Average flow based upon population projection.

   b. Commercial

      i. Area of land broken down by type of zoning.
      ii. Average flow based on acreage.

   c. Industrial

      i. Area of land broken down by type of zoning.
      ii. Average flow based on acreage.

2. Peak Flow

   Total of all average flow peaked in accordance with the Maryland Department of the Environment criteria.

3. Infiltration and Inflow

   a. Show calculations for residential units.
   b. Show calculations for commercial and industrial acreage.
   c. Total infiltration.

4. Design Flow

   a. Total of Peak and Infiltration/Inflow flows.
   b. Express in both gallons per day (gpd) and gallons per minute (gpm).

5. Service Area Map

   a. Present the service area indicating all properties that the pumping station will serve.
   b. The map shall be drawn to-scale and shall be property-specific.

B. Pumping Unit

1. Number of pumping units.

2. Type and size of pumping units including proposed manufacturer(s) and model #(s).

3. Projected flow capacity and head of each pumping unit.

4. Impeller size of pumping unit. (The recommended impeller shall not be the maximum or minimum permissible size for the specified pumping unit unless future growth within the drainage area, consistent with the Master Land Use Plan does not require future pump station upgrades)

5. Horsepower, speed, and efficiency for each motor (all motors shall be rated for premium efficiency (93% or greater)

6. Display pump curve and system curve and resultant design point. Identify Hazen-Williams C-factor used to develop system curve and type of pipe proposed. Present pump curves and resultant operating conditions with multiple pumps running.

7. NPSHA and NPSHR.

8. Minimum efficiency at design point.

9. Upgrades necessary for future flow conditions (i.e. pump size, impeller size, motor size, operating conditions). The design shall allow for an increase in impeller size, motor size and other conditions to accommodate future flow conditions.

10. Wet Well

    a. Minimum pump cycle time shall be 10 minutes
    b. Volume required.
    c. Volume provided.

11. Ventilation

    a. Minimum required (show computation).
    b. Proposed system with capacity, motor horsepower, motor speed, proposed manufacturer and model.

C. Address

Provide lot number, development street address, and BGE site address (during as-built submittal only).

6.11 Pumping Station Design

A. Site Design

1. Location

Pumping station locations (including emergency generator) shall conform to the Harford County subdivision regulations and zoning code. In residentially-zoned areas the wet well, dry well, emergency generator and perimeter fence shall be no closer than 200 feet to the property line of the residentially-zoned property.

2. Land Acquisition

The land required for the pump station, including the necessary vehicular access routes to an existing or proposed public right-of-way shall be dedicated to Harford County Government in fee simple. This process includes a property boundary survey together with a record plat accompanying deed, and a metes and bounds description of the property. In determining the space requirements for the facility, particular attention shall be given to the width of the strip of land for the access road to ensure adequate space for grading and drainage.

The access road may not serve as a multi-use purpose, such as being coupled with access to the stormwater management facility or with a private driveway. A completely separate access road shall be provided to the pump station.

3. Site Plan

Two site plans shall be developed as part of the site design. One plan shall be drawn at a scale of 1” = 50’ and shall be included with the force main plan sheets. In reference to the pumping station site, the site features including access drive, wet well, dry well, control building, SCADA antenna, generator and water meter vault shall be shown.

The other site plan of the pump station site shall be drawn at a scale of 1” = 10’ and shall show all proposed above and below ground facilities. The site plan shall also show the existing and proposed contours (with 1 foot contour interval) landscaping and sediment control (for capital projects).

The location of all proposed facilities required for the pumping station site shall be clear and concise to permit a field stakeout from the plan information. A stake out table listing all components of the proposed pump station site, along with their corresponding survey coordinates shall be provided on the construction drawings. As an alternate to using coordinates to stake out the pumping station, the location of the proposed facilities may be projected from a baseline established from the traverse shown on the plan. The baseline shall be located so that it will not be

disturbed from the proposed construction. At a minimum, the following items shall be shown for stake-out:

a. manholes
b. wet well
c. dry well
d. control building
e. meter vault (if applicable)
f. generator
g. SCADA antenna
h. fencing
i. access road geometry

4. Floodplain

Wastewater pumping stations shall be sited to remain operational during the 100-year return frequency flood. Certain items shall be located above the 100-year flood elevation. These items include: the paving within the fenced area, the wet well, dry well, control building, emergency generator (if located outside of fenced area) and BGE transformer. If the site is adjacent to non-tidal waters, the above items shall be a minimum one foot above the 100-year floodplain elevation. If the site is adjacent to the tidal waters, the above items shall be a minimum of 2 feet above the 100-year floodplain to account for storm surge.

The access road shall be fully accessible during the 100-year flood. In order to accomplish this requirement, all points of access to the pump station, from the County road right-of-way, shall be no less than the 100-year floodplain elevation.

5. Wetlands

The pumping station site shall be located outside of the 25-foot wetland buffer and preferably outside of the 75-foot wetland buffer.

6. Site Paving

The entire pump station site within the fenced area (and one foot beyond) shall be paved in accordance with the paving requirements of the entrance road.

7. Grading

Grades for paved areas at the pump station site shall prevent local ponding, and provide positive drainage away from structures. The grading of the land beyond the perimeter fence shall not exceed 3:1 slopes. 4:1 maximum slopes are desirable. Lesser slopes wherever possible are preferred. Site grading design shall be compatible with the slope stability of the soil type encountered. Slope stabilization techniques shall be

appropriate for the degree of slope and soil type. The use of retaining walls adjacent to the pump station site is not permitted without written authorization.

8. Entrance Road

a. The plan of the entrance road shall show the centerline with horizontal geometry including PC's, PTs, curve data and road stationing. This information shall be shown on the 1" = 50' plan drawings.

b. A profile of the entrance road shall be shown on the construction drawings. Centerline road stations shall be provided along with tangent grades and vertical curve data.

c. Vehicular access shall be provided to every pumping station site by means of a paved entrance road. All entrance roads and tee turn arounds shall be a minimum of 12-feet wide and be paved in accordance with the Harford County Road Code Standard Detail R-1 and R-1a.

d. A vehicular turn-around shall be provided outside of the perimeter fencing in front of the pump station site. The minimum fillet radius of the turn-around shall be 15-feet.

e. The maximum grade of the road shall be 10 percent. A minimum 2-foot grassed shoulder shall be provided on either side of the road. The roadway pavement shall be crowned and not super-elevated. Accommodations for drainage shall be provided on both sides of the road by means of open ditches. If drainage must cross the road, it shall do so beneath the road within a culvert.

f. The horizontal and vertical geometry of the entrance road shall accommodate the backing-in of an 18 wheel, 8000 gallon, 48 ft. long tractor trailer. The tanker truck shall be capable of being within 25 feet of the wet well. The entrance road shall also accommodate diesel fuel delivery trucks.

g. A guardrail shall be designed adjacent to the entrance road when the slope from shoulder of road is steeper than 4:1 or the vertical distance to a level area is eight (8) feet or greater. A detail of the guardrail shall be included on the construction drawings.

h. An access drive barrier in accordance with Standard Detail G-17 shall be provided approximately fifteen feet after the beginning of the entrance road. The access drive barrier shall be identified in the appropriate plan view(s). In some cases, the Division of Water and Sewer may require the planting of trees and/or shrubs adjacent to the access drive barrier to deter unauthorized vehicles from driving around the barrier.

i. The force main and gravity sewer shall be located within or alongside the access road to the extent being practical and reasonable.

9. Landscaping

a. Landscaping in the form of trees and/or trees and shrubs shall be included as part of the pump station site plan if required by Division of Water and Sewer. Generally, landscaping will be required when the proposed pump station site will be within direct view of existing and proposed residential dwellings. The purpose of the plantings is to provide a year-round screen around the pump station site.

b. If plantings are required by the Division of Water and Sewer, a landscape plan shall be prepared showing the planting arrangement of the trees and shrubs, identifying each by both genetic names and common names, and specifying size and installation details. Landscaping plants shall be aesthetically pleasing and require minimal maintenance (watering, fertilizing, trimming, etc.). The use of White Pine is prohibited. The landscaping plan shall be a part of the construction drawings.

c. If space requirements do not allow the planting of trees and shrubs, the Division of Water and Sewer will consider allowing the use of green fence slats, especially manufactured to have the appearance and texture of a “hedge”.

10. Site Fencing

Generally, pump station sites shall be enclosed with a six (6) foot high chain link fence in accordance with Standard Detail G-13. A fourteen (14) foot wide double swing gate shall be integrated into the fencing with 180 degree wing hinge. The gate shall be centered on the entrance road. The fence shall be installed one foot inside the pavement at the pump station site.

11. Access Within Site Fencing

All major equipment shall be fully accessible by vehicles/trucks within the fenced area. There shall be a fully open area between the gate and opposite fence. The SCADA antenna shall be located to enable a boom truck to park beneath it for maintenance purposes.

12. Site Lighting

Pump station sites shall be illuminated with motion-activated twin floodlights. The floodlights shall be heavy duty with a built-in photo cell that activates the motion sensor at darkness. When motion stops, the lights shall remain on for a minimum of 5 minutes. Lamps shall be 150W incandescent. The lighting shall be sufficient to fully illuminate the fence enclosure area. A switch shall be provided which is capable of de-activating the motion sensor.

13. Water Supply

The pump station shall be equipped with a County-approved 2-inch wall-mounted hydrant and an ample supply of water for hosing down wet wells and general maintenance. The pump station site shall include a 2-inch water meter and backflow preventer in accordance with the guidelines stated herein.

14. Pump-Around

The design shall include a pump-around for the purpose of pumping from the wet well into the force main by means of a portable above-ground pump. The pump-around shall be located within the enclosed fence area and shall match the configuration in the Standard Details.

15. Geo-technical Information

The Engineer shall evaluate the soil conditions by performing tests on the site soils for the purpose of designing the sub-structures and to assist the Contractor in determining construction means and methods. As part of this evaluation, a minimum of one soil boring shall be performed for submersible, suction lift and package wet well/dry well pump stations. Additional soil borings shall be performed for built-in-place wet well/dry well pump stations. The soil boring shall be at the proposed wet well location. The boring shall extend to a depth of three (3) feet below the bottom of the proposed dry well foundation. Information to be obtained include soil type, water table elevation, rock elevation, soil bearing values, etc. When in soil, standard penetration tests shall be taken at intervals not to exceed five (5) feet. When in rock, the rock shall be cored with a double tubed core barrel sized NWX and length of individual core runs shall not exceed five (5) feet. The results of the boring logs and field investigation shall be included in one of the Appendices of the

specifications. The soil boring location(s) shall be identified in plan view.

16. Water Service

The pumping station shall receive water service by a 2-inch water main. A curb stop with roadway box shall be located on the service in the vicinity of the beginning of the entrance road. The water meter and backflow preventer shall be located within the control building.

B. Structures

1. Wet Well Design

Wet wells shall be designed and constructed to be as hazard free as possible, and corrosion-resistant materials shall be used throughout. All materials and equipment used in wet wells shall meet NEC Class I, Division I standards, with the exception of control floats. Conduits between the junction box and control building shall be sealed at the junction box. Conduits carrying float cables between the junction box and the wet well shall not be sealed All metal within the wet well shall be stainless steel.

a. Structure: Wastewater pumping station wet wells shall be constructed of reinforced concrete. Wet wells shall have an interior epoxy paint finish and exterior bitumastic waterproofing. The bottom of the wet well shall be grouted to a minimum slope of 45 degrees toward the pump suction inlet. Wet wells shall be adequately designed to prevent flotation. The wet well size and depth shall be as required to accommodate the influent sewer, as well as pump suction submergence as recommended by Hydraulic Institute Standards. The required working volume and preferred intervals between influent sewer and control elevations shall be determined as follows:

$T = 4V/Q$ where:

- T = Pump Cycle Time (time between pump starts) in minutes. T shall be 10 minutes.
- V = Volume of wet well between the lead pump start and pump stop elevations, in gallons
- Q = Pump rate of the lead pump, in gallons per minute

When initial average flows are insufficient to actuate the pumps within a 30-minute period, the liquid level control points for initial operation shall be recommended by the Engineer to be lowered for pump start. Wet wells shall be deep enough to accommodate the control elevation points described in paragraph 6.11.D.5, “Controls & Alarms”.

b. Access: Wet well access shall be through a top slab opening with aluminum hatch cover and frame with stainless steel door shock. The top slab access hatch shall be 36-inch by 36-inch minimum size and as large as necessary to allow removal of equipment from the wet well. This size shall be reduced to 24 x 36 inch for suction lift pump stations.

c. Ventilation

The wet well shall be provided with a stand-alone ventilation system sized to provide a minimum of 30 complete air changes per hour. Air exchanging shall be accompanied by an above-ground blower with both manual control and time-clock operation. Time-clock operation shall provide a minimum of 2 complete air exchanges per hour.

Ventilation shall be accomplished by the suction side of the blower connected to an outflow wet well vent pipe with fresh air entering a separate inflow wet well vent pipe. The discharge of the blower shall connect to an above ground carbon canister odor control system. Consideration shall be given not to direct or locate the discharge towards adjacent property with residential homes. The inflow wet well vent pipe shall be in a goose-neck configuration and shall consist of schedule 80 galvanized steel piping, galvanized after fabrication; shall contain a stainless steel bird screen; and shall be embedded in the pre-cast concrete top slab of the wet well. The bottom of the vent shall be flush with the underneath of the wet well top slab. The outflow vent piping shall be schedule 80 PVC and shall terminate two feet above the crown of the influent sewer.

2. Dry Well Design

a. Structure

Wastewater pumping station dry wells shall be constructed of reinforced concrete. The exterior of the structure shall be sealed with 2 coats of a bitumastic waterproofing coating. The dry well shall be designed to prevent flotation. The floor shall be sloped towards a sump. Any suction and discharge pipe penetrations through a pre-cast concrete structure shall be sealed with mechanical compression-type seals. Any suction and discharge pipe penetrations through a cast-in-place concrete structure shall

be by means of a wall casting. The dry well chamber shall have a minimum 10-foot inside diameter.

b. Access

1. Package Dry Well/ Wet Well

A 4-foot diameter pre-cast concrete entrance way shall be designed for access into the dry well chamber by means of a Davit hoist in accordance with MOSH Standards. Dry well personnel access shall be accomplished by means of a ladder fastened to the side of the entrance-way and drywell. The ladder shall be equipped with safety extension poles. The access tube and ladder shall be located on the opposite side of the pumps and centered between the suction lines. Lifting eyes shall be cast into the underneath side of the dry well precast concrete slab, directly above the pumps and motors to facilitate the removal of the pumps and motors.

2. Built-in-Place Dry Well/Wet Well

Dry well access shall be accomplished by means of a staircase with all necessary landings and handrails per MOSHA requirements. Equipment hatches for the pumps shall be located in the top slab, directly above the pumps. Traversing monorails with cranes of adequate capacity shall be provided in the motor control room above the dry well to facilitate removal of the pumps, motors, valves and other related equipment. Grating (catwalks) shall be provided in the dry well to facilitate access to all piping and appurtenances without climbing over pipes, equipment, etc.

c. Leakage

The Engineer shall specify that groundwater leakage into the dry well will not be allowed. For package wet well/dry well pump stations, the Engineer shall specify the dry well and access tube be vacuum tested integrally as one structure prior to backfill of the structure.

Once all pre-cast sections have been placed and sealed properly the entire pre-cast dry well shall be tested for leakage prior to backfilling. All pipe openings within the dry well shall be plugged, taking care to securely brace the plugs from movement. A vacuum test head shall be placed at the top of the entrance tube and sealed to the precast concrete. A vacuum of 10 inches of mercury (5.0 psi) shall be drawn and the vacuum pump turned off. The leak test shall pass if the structure maintains the required

vacuum for a minimum of five minutes. Testing shall be performed by a pre-approved contractor.

d. Ventilation

Dry wells shall be provided with a separate ventilating system and sized to provide a minimum of 10 complete air exchanges per hour. Air exchanging shall be by means of a blower installed within the dry well with both manual and time-clock operation. Time-clock operation shall provide a minimum of four (4) complete air exchanges per hour. In no cases shall the dry well ventilation be connected to the wet well ventilation.

3. Pumping Station Building

A pumping station building shall be provided for all built-in-place dry well/wet well pumping stations and shall be built over the dry well. It is beyond the scope of these design guidelines to present the standards of this type of building.

4. Control Building

A control building shall be provided for submersible, suction-lift and package dry well/wet well pump stations. The purpose of the building is to provide a permanent, weatherproof structure to contain the electrical control panels and main breakers, SCADA RTU panel, VFDs (if required), automatic transfer switch, motor controls, chart recorder and related accessories to maintain and control the pump station. Each building may have its interior or exterior orientation configured differently to match the location and application. The general control building layout is shown in the Chapter 6 Appendix. In no case shall the interior space of the control building be less than 120 square feet.

For sanitation and hygiene purposes, control buildings shall include a utility sink with hot and cold running water, soap and towel dispenser. Hot water shall be provided by means of an on-demand hot water system. The water line shall be protected from freezing. The waste shall drain directly into the wet well or influent manhole with appropriate trap beneath the floor.

The control building may be either pre-fabricated or built on-site. The walls of the building shall be constructed of either split-faced concrete block (CMU) or masonry units with a brick veneer. The architectural style and coloring of the building exterior shall compliment the surrounding community and be approved by the Division of Water and Sewer. The floor shall consist of a minimum 4-inch thick reinforced concrete slab with appropriate concrete reinforced footings. The roof of the building shall be the gable type with soffit overhangs on either side. The roof joists, rafters and sheathing shall all be of wood construction. The sheathing shall

receive minimum 30 pound building paper followed by minimum 40-year asphalt-fiberglass shingles. An aluminum drip edge shall be provided. A continuous ridge vent shall be installed at the roof peak and the prefinished aluminum soffit vent shall be installed under the eaves of the roof. Both roof ends of the building shall be clad with wood sheathing, building paper and vinyl lap siding. All fascia shall be covered with painted, maintenance-free aluminum trim. Both sides of the roof shall have pre-finished aluminum gutters and downspouts with pre-cast concrete splashblocks. The interior ceiling of the control building shall contain 5/8" drywall with batt insulation rated for a minimum R- Value of R-30. The entry shall receive a 3' – 0"x 6' - 8" door with lock keyed to the County's cyber-lock system. The interior of the building shall be heated with an electric unit heater controlled by a thermostat to maintain a minimum temperature of 55 degrees F. Ventilation shall be provided by means of wall mounted exhaust fans with backdraft dampers operated by thermostats and freeze stats and intake louvers with motor operated dampers. All louvers shall also have insect screens. The interior of the building shall be well lighted by means of a minimum of two twin-bulb 48-inch fluorescent lighting fixtures.

A reduced pressure zone backflow prevention device and water meter shall be located within the control building. Two-inch piping shall extend beyond the backflow device to an exterior-mounted 2-inch wall hydrant (freeze-proof). A floor drain and trap shall be designed in the floor of the control building in the vicinity of the backflow preventor. The floor of the control building shall be sloped towards the drain.

5. Flow Meter Vault

Submersible and suction lift pump stations shall have the flow meter housed within a rectangular underground pre-cast concrete meter vault. All exposed piping in the meter vault shall be coated in accordance with Section 6.11.E, Painting. Stainless steel hardware shall be used within the meter vault. The vault shall be drained to the wet well by means of a manually operated valve. The flowmeter vault shall include a GFCI receptacle. The flowmeter vault shall be located within the paved area of the pump station site but outside of the thru-way. Access into the vault shall be through a 36" x 36" aluminum hatch capable of withstanding an H-20 live load. The Division of Water and Sewer may consider waiving the H-20 loading requirement if the vault is located in an area which can not be ridden over by vehicles. Access from the hatch into the vault shall be by an aluminum ladder to the bottom of the vault. The access ladder shall have safety extension poles at the top. The vault shall be drained to the wet well with a 4-inch drain to the wet well with a valve in the normally closed position. For submersible pump stations, the vault shall also function to house the check valve(s).

C. Equipment

1. Pumping Units (built-in-place wet well/dry well, package wet well/dry well, and suction-lift)

   The pump suction and discharge shall be a minimum of 4-inches in diameter. All pumps shall rotate clockwise as viewed from above, and shall be centrifugal non-clog solids handling pumps capable of passing a 3-inch sphere and meet all MDE requirements. The pump bearings shall have a minimum 100,000 hours ABMA-10 bearing life. The pump motors shall be operated on 460 volt, 3 phase, 60 cycle electrical service. The pump motor horsepower shall be sufficient to prevent motor overload under all possible conditions. All motors shall be rated as premium efficiency, having efficiencies 93% or greater.

   Where dry-pit submersible pumps are proposed or required, the following features shall be incorporated:

   a. One piece backhead and motor adaptor with impeller adjustment cap screws.

   b. Solid full diameter stainless steel shaft.

   c. Double mechanical shaft seals cooled and lubricated by sewage through a cleanable seal filter assembly and provided with a mechanical seal vent with petcock.

2. Pumping Units (Submersible)

   Typically, the range in flow for submersible pump stations is so low that a velocity of 3 feet per second cannot be achieved in a minimum 4-inch diameter force main. As a result, typical designs will require the application of a grinder pump, capable of grinding wastewater solids into a slurry.

   The pumps shall be of the sealed submersible type with 2 mechanical seals, mounted in tandem, with an oil chamber between the seals. The pump shall be equipped with a seal leak detection probe and warning system. The impeller shall be of the recessed vortex design and be capable of being trimmed. The pump impeller and grinder unit shall both be attached to a stainless steel shaft connected to the motor. The grinder unit shall consist of two-stage cutting action, each being perpendicular in plane to the other. The grinder shall be capable of grinding all materials normally found in domestic sewage into a slurry with particle dimensions no greater than ¼ inch. Grinder cutters shall be stainless 440c stainless steel hardened to Rockwall C-55.

The pumps shall be inserted and removed from the wet well by means of a stainless steel lift-out rail system. The guiderail shall have a stationary fitting with a fabric reinforced Neoprene diaphragm clamped between the rail and discharge piping for the proper seal between the pump and discharge piping.

3. Valves

   a. Each wastewater pump shall have isolation valves on the suction and discharge to permit the removal or maintenance of the pumps without affecting the operation of the remaining pump(s). Interior isolation valves shall be resilient seat gate valves (open left). The hand wheels shall be marked with an open arrow.

   b. Each wastewater pump shall have a hydraulically cushioned spring loaded check valve to prevent backflow from the force main through inoperative pumps. The check valve closure shall prevent a water hammer condition in accordance with the criteria for water hammer control.

4. Flow Metering

   All pump stations shall have neoprene or polyurethane-lined magnetic flow meters with a replacement spool piece to enable the pump station to operate while the flow meter is being serviced. Built-in-place dry well/wet well pump stations shall have by-pass piping around the flow meter due to the higher and more continuous flows experienced at these type of pump stations. Magnetic flow meters shall be provided with ground rings and isolation valves. Accuracy shall be within 5% of flow. All flow meters shall have an adequate straight run of pipe both upstream and downstream of the meter to achieve the above accuracy in accordance with the manufacturer's recommendations. Final accuracy shall be 5%. A 7-day circular chart recorder with totalizer and indicator recorder capable of reading units of gpm and mgd, shall also be provided.

5. Interior Piping

   All interior piping designated to convey sewage shall be DIP Class 52 minimum, with flanged fittings. Flanges shall be integrally cast on pipe or factory assembled screwed-on with proper bonding compound. Manifolds shall include flexible couplings with tie rods for make-up and for expansion and contraction of the piping system. Flexible couplings shall be provided on the suction and discharge of every pump. The arrangement of piping and equipment within the dry well shall be made with adequate space for maintenance, repair, removal or replacement of equipment, as well as to safeguard personnel working in the dry well. Piping shall be adequately supported. Control and instrumentation piping shall be copper or stainless steel. Piping for potable water shall be PVC. Piping for the sump pump discharge shall be schedule 80 PVC.

6. Pressure Gauges

Pressure gauges for the direct reading of line conditions shall be placed on both the suction and discharge of each pump and on the main discharge header piping after the last pump. Pressure gauges with 1 psi increments shall be oil-filled and have a minimum 3 1/2" diameter face and be equipped with snubbers and diaphragm seals. Accuracy shall be to within 0.5% of pressure. The pressure gauges shall have a range in pressure such that the normal operating pressure is near the middle of the gauge.

7. Sump Pump

Pump stations shall contain a sump pump located within the floor sump which are capable of pumping water and wastewater. The sump pump discharge piping shall be schedule 80 PVC and shall be routed to pump into the wet well a minimum of one foot above the influent line. The sump pump and discharge piping shall contain two single check valves.

8. Dehumidifier

Dry wells for package wet well/dry well pump stations shall contain a dehumidifier certified by the Association of Appliance Manufacturer's and shall be capable of removing 22 pints of water per 24 hours at 60% humidity at 80 degrees farenheit. The dehumidifier shall drain to the sump pump.

9. Running Time Meters

Running time meters shall be provided for each pump to indicate total hours of operation of each pump. A third running meter shall be provided to indicate total hours of operation of two or more pumps running simultaneously.

10. Motor Controls

Variable speed drives (VFDs) shall be considered for all built in place drywell/wetwell pump stations. VFDs shall also be considered for pump stations with a high total dynamic head.

D. Electrical and Controls

1. Electrical Design

All electrical designs and components shall be in strict accordance with all applicable National Codes, County Codes and BGE requirements. Electrical design shall be such that phase out protection shall be provided so that the power will automatically switch off in the event of a loss of any one phase. Incoming electrical service shall be underground with electric meters installed on the exterior of the pumping station building or control building. All exterior above-ground electrical equipment shall be housed in at least a NEMA 3R enclosure and be U.L. listed. All electrical equipment within the control building shall have at least a NEMA 4 rating. The electrical plans shall include, but not be limited to, the following:

a. Complete plan layout indicating all conduit, wire sizes and equipment locations including lighting and other appurtenances.
b. Installation details of equipment that are wall mounted, or suspended from the ceiling or otherwise required for clarity to be submitted during shop drawing phase.
c. Single line diagrams incorporating all electrical components required for operation of the facility.
d. Complete lighting schedule noting model, size, location and installation data as well as appurtenances. Vandalproof exterior lighting shall be provided.
e. Complete control and SCADA diagrams.
f. Elevation of control panels with equipment and mounting dimensions and notes identifying each component to be submitted during shop drawing phase.
g. Complete circuit breaker schedule indicating size and identifying each circuit.
h. Ventilation schedule noting fan size, operating conditions, location, model, installation data, etc. The ventilation schedule shall also outline louver data including size, material, fixed or motorized.
i. Secondary power facilities and alarm equipment shall be designed so that they may be manually activated for periodic maintenance checks to ensure proper operation.
j. Provide a legend of all symbols used for the above.

2. Lightning and Surge Protection

The Engineer shall specify a lightning arrestor and surge protection be provided at the pumping station, including the control building, SCADA antenna, emergency generator and dry well. The proposed lightning and surge protection shall comply with the latest editions of all applicable codes and standards.

3. Uninteruptable Power Supply (UPS)

Most programmable functions within pumping stations contain non-volatile memory which do not lose memory during power loss. A UPS shall be provided for any feature which is not Eprom–based or has volatile memory.

4. Backup Power Supply

All pumping stations shall be equipped with a complete and operable emergency/standby electric generating system. The system shall be capable of automatic and manual start-up and cut-in operation. The unit shall be adequate to provide power for pumping, lighting, ventilation systems and such other systems affecting reliability, capability and safety. The generator shall be sized to operate all pumps running simultaneously but turning on in a staggered fashion. Installation shall be in accordance with applicable National Electric Code Articles and all local and Maryland State requirements. System performance shall be in accordance with applicable NFPA Standards. All wastewater pumping stations which require 3-phase electrical service shall incorporate a phase monitor in the back-up power supply system.

a. The emergency power generator shall be a single diesel engine driven electric generator complete with control devices, exercise clock, batteries, battery charger, main line circuit breaker, exhaust silencer, vibration isolators, weather resistant housing and a fuel system. The engine generator set shall be an assembled and tested product of an established manufacturer that has been in continuous production of units of the required size and type for a period of not less than five years.

b. The generator set manufacturer shall have a maintenance and service organization local to the Harford County area, where skilled, factory-trained personnel are available on a 24-hour basis.

c. The engine generator set shall meet all the requirements of Maryland State Department of Health and Mental Hygiene Regulation 10.03.35, Rules and Regulations Governing the Control of Air Pollution in the State of Maryland.

d. After installation, the manufacturer shall provide the services of a capable service engineer to conduct a final test and instruct the County operating personnel. The County shall also be provided with factory test data indicating that the unit has the specified capacity and is capable of delivering full load continuously. All fuel, lubricating oil antifreeze solution, electrical instruments and equipment required for the test shall be furnished by the Contractor. The Contractor shall fill the fuel tank after testing.

e. The diesel engine shall be a watercooled, multi-cylinder of the compression ignition, solid injection type. The maximum speed of engine in the service anticipated shall not exceed 1800 rpm. The lubricating system shall be of the forced feed type.

f. The diesel engine shall operate satisfactorily on a commercial grade of #2 diesel fuel oil.

g. Fuel Storage Tanks – Fuel storage tanks shall be of the size and type shown on the table below according to the size of the generator. All belly-type tanks shall be double-walled.

Generator Size	Minimum Tank Size	Tank Type
Up to 45 KW	175 gals	belly tank, above grade
45 to 100	260 gals	belly tank, above grade
over 100	550 gals (See Note below)	steel, above grade

NOTE: If required by the Division of Water and Sewer, the fuel storage tank shall be sized for 24-hour continuous service at maximum load.

If the generator design does not allow a belly tank to be installed, the location of the tank shall be as directed by the Division of Water and Sewer. All generator fuel tanks shall be installed above ground. Double containment shall be provided for the fuel tank in accordance with Local, State and Federal Regulations.

h. The diesel engine shall be complete with all fluids, filters and the industry standard engine governor, engine mounted water heater and safety shut-offs.

i. Exhaust Silencers – All generator sets shall have a critical type ~~of~~ exhaust silencer which shall be constructed of stainless steel. All piping from the manifold, including the muffler, shall be stainless steel.

j. Sound Attenuation - Sound attenuation enclosures may be required as determined by the Division of Water and Sewer on a case by case basis.

5. Electrical Conduit

All underground electrical conduit shall be rigid galvanized conduit (rgc). Interior electrical conduit may be either electrical metallic tubing (emt) or rgc. All ground penetrations shall include flexible expansion couplings to account for potential settlement.

6. Controls

The pumps shall be controlled primarily with a submersible pressure transducer. This primary control system shall have a redundant back-up control system by means of mercury float switches. The pressure transducer shall turn the pumps on or off at various levels in the wet well as shown on the typical sectional views in the Chapter 6 Appendix and as described below.

The distance of water levels in the wet well between lead pump on and off shall be no less than 2 feet. The high water alarm elevation and lag pump on elevation shall both be set at a minimum one (1) foot below the lowest influent sewer invert elevation. These two set points shall be at different elevations. The pump off elevation shall be set to prevent vortexing and NPSHA problems.

As previously noted, the pump station shall also have a back-up mercury float switch control system with floats, if the pressure transducer control system malfunctions. The backup floats shall be wired directly into the pump motor starters or VFD (if applicable). The controls shall be designed so that upon a malfunction of the pressure transducer, control shall be transferred to the backup float control system and an alarm transmitted to the SCADA system. Both the pressure transducer and mercury floats shall work together in the same pump control system. However, to achieve the “back-up” status, the floats shall be set at a slightly higher elevation than the pressure transducer settings. The backup mercury float switches shall consist of: high water alarm (dry contact float), both pumps on (same elevation as high water alarm), and low water cutoff. Both control systems shall be integrated into a custom-designed control panel. In case of high water alarm, both the lead and lag pump shall operate; however, an adjustable timer shall activate the lag pump 5 minutes after the lead pump turns on.

A separate manual control shall also be provided so that the pumps may be manually activated or shut down, thereby overriding the automatic controls. An exception to this override shall occur when the station shuts down due to a loss of phase.

7. SCADA System

A. General

1. The design of all pumping stations shall include a SCADA (System Control and Data Acquisition) system for the purpose of remote monitoring and control.

2. The Engineer shall be responsible for all facets of the project related to the SCADA system including: radio path study and testing and design.

3. Harford County has standardized on various aspects of the above work and will perform some of the work. All material, equipment and labor incurred by Harford County will be backcharged to the developer for developer projects. This work includes: (1) on-site assistance with the field radio path tests by using the County radios, (2) manufacture of the Remote Telemetry Units (RTU), and (3) installation, start-up and testing of the RTU and testing of the SCADA system.

4. The radio path study, including table top study and field tests shall be reviewed and approved by the Division of Water and Sewer prior to the first submittal of the construction drawings and specifications. Approval of the construction drawings will be contingent upon Harford County review and approval of the final report.

B. Description of SCADA System

1. The Division of Water and Sewer monitors sewage pumping stations by means of a SCADA system that utilizes Allen Bradley PLC's and a spread spectrum radio network that is composed of Utilinet II and Utilinet III Radios. Currently, the County standard is to install Utilinet III radios at all new installations. The spread spectrum radio network operates under FCC Part 15 rules for unlicensed radio operation in the 902 Mhz to 928 MHz band. The radios used in this system utilize the frequency-hopping technique using 240 FCC-assigned channels, with 100kHz spacing over the aforementioned band.

2. As of April 2005, the Radio Network basically consists of a master site, 11 "Core"sites, seven repeater sites and over 50 remote terminal units (RTU).

a. The master site is located at the Sod Run WWTP and consists of two radios known as the head end radios.

b. The core sites are typically located at elevated water tanks. They provide the elevation and geographic coverage to facilitate communication between the head end radios at Sod Run and RTU's at the wastewater pump stations. Each core site shall have two Integrated WANgate Radios with cavity filters.

c. The remote terminal units are located at the wastewater pumping stations. At a minimum, they shall provide the following inputs:

i. Discrete Inputs

aa. Loss of power
bb. Intrusion Acknowledge
cc. Pump #1 fail
dd. Pump #1 run
ee. Pump #2 fail
ff. Pump #2 run
gg. Control System operating on float back-up
hh. Primary and secondary high level alarm
ii. Automatic transfer switch in emergency position
jj. Dry well/pump room flood (when applicable)
kk. Spare
ll. Spare
mm. Spare

ii. Analog Inputs

aa. Flow rate (from flow meter)
bb. Wet well level (from pressure transducer)
cc. Spare
dd. Spare

Each RTU has an Integrated WANgate Radio housed in a NEMA 4 metal enclosure with a PLC, emergency power, emergency power charger, heater, and other appurtenances. Pump stations with analog inputs shall have PLC's that are equipped with analog input cards.

d. Repeater sites are used in areas where wastewater pump stations cannot effectively communicate with the radio network. The repeater sites consist of a WANgate Radio with internal battery backup, power supply (utility service or solar package).

3. All radios shall have 7dB omnidirectional antennas attached wooden or metal masts or structures. The design of the wooden or metal masts, including the foundation, grounding, cabling and method of antenna attachment shall be included on the construction drawings. LDF4-50A cable shall be utilized for distances 100 feet or less and LDF5-50A for distances greater than 100 feet.

4. The height of the mast shall not exceed 80 feet. Pressure treated wood poles shall be specified for heights up to 50 feet. Over 50 feet, galvanized steel monopoles shall be specified. The location of the antenna mast within the site shall be fully accessible to a boom truck positioned directly beneath the mast.

5. Splicing of cable is prohibited. There shall be one continuous piece of cable between the antenna and RTU.

C. Radio Path Study and Testing Requirements

1. General

a. A radio path study and field test are necessary to investigate and test the effectiveness of communications between the proposed pump station and the existing SCADA network.

b. All pump stations must have a reliable communication path to at least two (2) other routing radios in the SCADA system (core sites or master site).

c. The path study shall consist of (1) table top study in the form of a written report, (2) field study and (3) final report. The final report shall summarize the field tests and provide recommendations on the following:

i. Successful radio paths
ii. Antenna height at proposed pump station
iii. Repeater site location (if required) with repeater site antenna height and method of land acquisition and power supply. It shall

be noted that all repeater sites shall be located within (1) County road right-of-way, (2) Harford County Government property, or (3) property to be dedicated to Harford County in fee-simple.

iv. Antenna and mast preliminary design.

d. The radio path study and field testing shall be performed by a qualified sub-consultant to the Engineer that has experience using utilinet spread spectrum radio systems. If the sub-consultant has never previously performed a radio path study for the Division of Water and Sewer, the Engineer shall first submit the qualifications of the subconsultant for review and approval prior to commencing the work. All communications concerning the radio path study and testing shall be between the Engineer and County Project Coordinator.

2. Desktop Study

a. The desktop study consists of a preliminary analysis of the geography, terrain and foliage along potential radio paths selected by the Consultant.

b. The analysis shall include a topographic map that indicates the proposed pump station site, adjacent core site(s), and repeater sites. It is highly recommended the sub-consultant utilize the latest Harford County's GIS mapping which is typically on-hand with several local engineers or is available for purchase directly through Harford County. The mapping shall also include woodlands, structures or any other feature that could interfere with the radio transmission.

c. The sub-consultant shall provide ground profiles between the proposed site and proposed radio receiving sites, antenna heights, large structures and height of woodlands/forested areas shall be shown on the profiles. The profiles shall be drawn to a common horizontal and vertical scale.

d. The desk top study shall also include a link budget analysis for the proposed pathways. The link budget is the algebraic sum of loss factors between radios.

e. The desk top study shall provide preliminary recommendations for the antenna height at the proposed pump station and proposed repeater site(s) height and location (if necessary). The sub-consultant shall consider the effect of future foliage growth in the communication paths in the determination of the recommended antenna height. The desktop study shall be summarized in a report with exhibits and submitted to the County Project Coordinator for review and approval. Once all comments have satisfactorily been addressed by the sub-consultant, the Division of Water and Sewer will provide authorization to proceed with field testing.

3. Field Testing

a. The sub-consultant may not proceed with the field testing until the County has reviewed and approved the desk top study.

b. Field testing may not occur with the absence of leaves on the trees.

c. Field tests shall be used to confirm the path predictions from the desk top study and shall also provide information on potential interferences from other RF transmitters that may be in use in the vicinity of the radio site(s).

The sub-consultant, through the Engineer shall schedule the field testing through the County Project Coordinator a minimum of seven (7) working days in advance of the test. The County Project Coordinator and County SCADA specialist shall witness the field testing.

d. The sub-consultant shall provide all equipment necessary to perform the field test with the exception of the WANgate radio. At a minimum, the test equipment shall consist of the following:

i. Battery power supply for radio
ii. 3dB gain omnidirectional whip antenna(s)
iii. Rigid telescopying mast for proposed antenna heights up to 35 feet.
iv. Boom truck for proposed antenna heights 35 to 80 feet.

v. Hand-held GPS navigator provide the location coordinates and elevation.

vi. Coaxial cable (type LDF 4-50A- LMR 400) as manufactured by Andrew Cable, and equipped with type N RF connectors on each end.

vii. Laptop computer with Radioshop Software and the Utilinet Software suite compatible with the Utilinet III (or current) radio (connect, routman, and round trip)

e. The sub-consultant, Engineer and Developer shall obtain the necessary permission for access onto all proposed on-site and off-site testing locations.

f. The field tests shall be conducted by an experienced field technician that is thoroughly familiar with Utilinet radio networks and the Radioshop and Utilinet Software Suite.

g. The test procedure shall be in accordance with the following. Modifications may be allowed if agreed to in advance by the County. To request a variance, the Consultant must submit the proposed test modifications for review in writing to Harford County Division of Water and Sewer.

h. Test Procedure

i. Provide a sketch of each test site indicating the antenna location relative to some proposed and existing reference structures.

ii. Provide photographs of the test setup and site.

iii. Elevate the antenna to the recommended height and boot-up the radio. Allow at least five minutes for the radio to acquire other radios. If a repeater site is to be investigated as part of the field test, start the repeater site before proceeding further.

iv. Using the Radioshop software (with the log feature turned on) check and record the connectivity statistics and the names of all of the radios to which the test radio has connected.

v. Using the Radioshop software (turn the log on) query the local radio for the WAN Nodes Report and Scan List Report. Save the log to a file.

vi. Repeat the above procedures for each potential repeater site.

4. Connectivity Requirements

a. The following criteria are the minimum requirements for acceptable connectivity of the Utilinet II radio to another radio within the network:

i. Received Signal Strength Index (RSSI): 150 or greater

ii. Tickle Success (TICK): 70% or greater

iii. Data Acquisition Success (DACK): 90% or greater

5. Final Report

a. Upon completion of successful field testing, the sub-consultant shall prepare a written final report. The Engineer shall submit the final report to the County Project Coordinator for review and approval.

b. The report shall include a site map of each test site indicating the antenna location, antenna height, photographs of the field test set-up and a map of the region studied. If a repeater site(s) is proposed, the report shall include specific information on the repeater site location including:

i. Tax map, Parcel no.
ii. Property owner name and address
iii. Map of the property boundary with the antenna location designated. The map shall include other topographic information including contours, roads/drives, structures, trees, fences, streams/ditches and ponds.

iv. A site plan shall be presented to show the limits of property that is proposed to be acquired to locate the antenna.
v. A description on how the property is to be acquired.
vi. Proposed routing of electrical power supply.

c. The report shall summarize the field test procedures and include printouts of all of the data and graphics from the radio diagnostic software.

d. The report shall address potential sources of interference that may have been detected during the course of the field tests. Corrective measures shall be proposed to mitigate any potential interferences.

e. The final report shall also include the following:

i. Proposed type of antenna cable
ii. Proposed mast material and type
iii. Preliminary design of mast
iv. Recommendations on type of lightning protection and grounding.

The determination of the above information may require assistance from the Engineer.

E. Painting and Coating

All exposed ferrous metal piping, pump equipment and appurtenances shall be painted regardless of factory paint finishes. These items include but are not limited to all piping, valves, pumps, motors, grating, catwalks and stairs. Ferrous surfaces shall be hand-tooled to a SP#2 cleanliness removing all loose rust, scale and peeling paint. A degreaser shall be applied to remove all grease and oily film. The surfaces shall be coated with 5-7 mills of an epoxy mastic (epoxy/polyamine) paint. The following coloring scheme shall apply:

Item	Color
Pumps and Motors	Light Grey
Valves and Suction/Discharge Piping	Light Grey
Potable Water	Blue
Non-Potable Water	Green
Yard Hydrant	Safety Yellow

The wet well interior concrete surfaces (sides, bottom and top slab) shall be coated with a polyamine epoxy coal tar applied in accordance with the manufacturer's recommendations.

F. Safety Systems

The Engineer shall design safety apparatus for entry into confined spaces (ie. Underground vaults, wet wells, dry wells, meter vaults, etc.). Although they are not defined as confined spaces, dry wells shall also be equipped with the mounted bracket. A permanently mounted bracket shall be installed at every entry point. The bracket shall be compatible with the portable davit hoist system UH 505 as manufactured by UniHoist, Inc.

G. Odor Control

All pump stations shall include an odor control system. Odor control shall be achieved by venting the wet well exhaust air through activated carbon canisters. The number of canisters will depend upon the air flow rate of the wet well exhaust fan. The construction drawings shall clearly detail the proposed odor control system in plan and sectional view.

H. Spare Parts

The Engineer shall specify spare parts be provided by the Contractor. At a minimum, the following spare parts shall be provided: blower-belts, one-year supply of circular charts and pens, vault keys, and hydrant key.

I. Posting of Signs and Tags

The Engineer shall specify that all four sides of the security fence receive plastic "No trespassing" signs mounted with plastic ties. All confined spaces shall receive aluminum signs "Confined Space – No Entry Without Permit" riveted to hatch doors. All interior valves shall be tagged.

J. Shop Drawing Submittal

For developer projects, the shop drawing submittal, review and approval process shall follow the latest version of the "Developer Built Pumping Station S.O.P. Construction Phase Approval Process". For capital projects, the shop drawing approval process shall be in accordance with the Engineer's scope of services and construction specifications.

At a minimum, the following shop drawings shall be submitted for review and approval:

1. Pumps and motors
2. Factory-certified pump curve
3. Pre-cast and cast-in-place concrete structures
4. Pump station piping layout for package wet well/dry well and suction lift pump stations
5. Valves
6. Ladders
7. Float switches

8. Pressure transducer
9. Hatches
10. Blowers/fans
11. Sump Pump
12. Flow meter
13. Chart recorder
14. Pressure gauges
15. Carbon canisters
16. Seals for pipes penetrating wet well and dry well
17. Generator
18. Motor controls
19. VFD (if applicable)
20. Automatic transfer switches
21. PLC
22. Electrical panels
23. Scada antenna
24. Scada mast
25. Lights
26. Junction boxes
27. Dehumidifier
28. Unit heater
29. Motor operated dampers
30. Water meter and backflow preventer

K. Operation and Maintenance Manual

Prior to start-up and testing of any system or equipment, the Contractor shall submit a draft O & M Manual. For developer projects, the contractor shall submit the draft O & M Manual to the Engineer. Once the Engineer is satisfied with the contents and completeness of the manual, the Engineer shall submit the manual to the County Project Coordinator. The remaining process is outlined in the "Developer Built Pumping Station S.O.P. Construction Phase Approval Process". For capital projects, the O & M Manual shall be submitted per the Engineer's scope of services and construction specifications.

For developer projects, the Engineer shall specify that the Contractor instruct the Division of Water and Sewer personnel in the maintenance of equipment and in the operation of equipment and systems.

The O & M Manual shall be in the form of an instruction manual in one or more commercial quality 3-ring binders with durable and cleanable plastic covers. A title sheet shall be placed beneath a see-through plastic sleeve on the cover with the printed title "Operation and Maintenance Manual" and the project title and contract number. Manufacturer's printed data or text shall be neatly typed on 8 ½ x 11 inch paper. Drawings shall be folded as required and provided with a reinforced punched binder tab. A flyleaf shall be inserted between each separate product or equipment.

The manual shall contain a typewritten table of contents for each volume. Each volume shall contain the following information which pertains to the information presented in each volume. Name of Contractor, Name of responsible principal with Contractor, Contractor address and telephone number, listing of all maintenance contractors, listing of local suppliers of each part for repair or replacement, each product shall be identified by name as identified in the plans and specifications.

Only those sheets which are pertinent to the specific product shall be included. Each sheet shall be noted to clearly identify the specific product or part.

The information shall be supplemented with drawings as necessary to clearly illustrate relations of component parts of equipment and systems and control and flow diagrams.

Written text shall be provided to supplement product data. All applicable equipment certifications shall be included in the O & M Manual including but not limited to generator load test, backflow certificate, flow meter/chart, recorder, calibrate pressure gauges.

If the record plat has been recorded at the time of O&M Manual submission, a copy of the record plat shall be included in the O&M Manual.

The final submission of the O&M Manual shall include both hard copies as well as a CD-ROM.

L. As-Built Drawings

The Engineer shall submit as-built drawings for review and approval, prior to the execution of the Operational Certificate. The as-built drawing process shall be in accordance with Chapter 1, Section 1.13.

M. Pump Vibration Test

All sewage pumps and motors must undergo and pass an on-site vibration test performed by an independent vibration testing company prior to operational acceptance. Acceptable field vibration limits shall be in accordance with figure 1.105 of the Hydraulic Institute Standards.

N. Pump Drawdown Test

Prior to operational approval, all pumps shall be tested using the standard draw-down method by the Developer, and witnessed by his Engineer, the Division of Water and Sewer Engineer and the Division of Water and Sewer Operations section. Operational approval shall be dependent upon a successful testing and County approval.

O. Pump Station Abandonment

Periodically, a developer project or capital project will involve the abandonment of an existing wastewater pumping station. The following provides guidelines on pump station abandonment procedures:

1. General

   a. The extent and method of abandonment shall clearly be shown on the construction drawings. If the project does not have specifications associated with it, abandonment specifications shall be added to the construction drawings. The Engineer shall provide a clear and concise sequence of construction on the construction drawings.

   b. The Engineer shall meet with the County Project Facilitator to itemize those components which the Division of Water and Sewer wishes to salvage and have shipped to the Sod Run WWTP. The salvageable items will vary from station to station.

   c. The review and approval process of all abandonment shall strictly follow the applicable sections of the “Developer-Built Pumping Station S.O.P. Construction Phase Approval Process”.

   d. All design and construction activities associated with the abandonment shall be coordinated with the County Project Facilitator.

2. Salvaged Equipment

   a. The County Project Facilitator will provide the Engineer with a detailed list of items to be saved, protected, removed, and shipped to the Sod Run WWTP. Typical salvaged components may include: SCADA antenna, SCADA RTU, panel and radio, electrical panels, enclosures, external lights, generator, pumps, motors, impellers, blowers, dehumidifier, unit heater, manhole frame and cover and yard hydrant.

   b. The Contractor shall exercise the utmost care in removing salvaged components to prevent damage. Sufficient labor and machinery shall be used to safely remove and transport the components without damage.

   c. Salvaged components shall be cleaned, packaged in boxes, crates or strapped to wooden pallets and delivered to the Sod Run WWTP. All components shall be stored in accordance with the manufacturer requirements and protected from moisture damage, vandalism, and theft. The Contractor shall be responsible for all security measures and shall insure the salvaged components.

Delivery shall be scheduled through the Harford County Sod Run WWTP maintenance supervisor.

3. In-Place Abandonment

Prior to abandoning the pump station, the force main shall be drained back into the wet well. The sewage shall be pumped into tanker trucks and shipped to the Sod Run WWTP. Care must be taken not to overflow the wet well.

Additionally, prior to abandoning any item, the pump station shall be de-energized and electrical service shall be shut off by BGE.

a. Dry Well

After all of the salvaged components within the dry well are removed, the dry well entrance way shall be cut a minimum three (3) feet below grade and disposed off-site. A minimum of four (4) 3-inch diameter holes shall be cored into the bottom side walls for drainage. The dry well shall be filled with pea gravel or other self-leveling and self-compacting aggregate. Suitable fill material does not include soil or sand.

b. Wet Well

The top slab shall be removed and the side walls shall be cut a minimum three (3) feet below grade and disposed off-site. The wet well shall be backfilled similarly to the dry well.

c. BGE Transformer

If, at the request of the Division of Water and Sewer, the BGE transformer shall be removed and power cut at the electrical distribution main.

4. Coordination with Utility Companies

a. As with all projects, the Engineer shall require the Contractor to notify Miss Utility prior to any site work. If the Contractor encounters unknown utilities he shall immediately notify the County Project Coordinator and take all of the necessary and proper steps to protect the continuance of service of the utility. In case of damage to utilities designated to be saved, the Contractor shall have such utilities repaired or replaced equal to, prior to damage.

b. Underground Diesel Tank

Underground diesel fuel tanks shall be removed in strict compliance with MDE regulations. The Engineer shall apply for an MDE permit associated with the tank removal. The tank shall be removed and disposed of in accordance with MDE regulations.

c. Above-Ground Structures

Control buildings, fencing, asphalt pavement, gravel, SCADA antenna masts, control panels, lights, and concrete pads shall be removed and disposed of off-site.

d. Water and Sewer Mains

All water and sewer mains shall be abandoned in accordance with Section 2050 of the Standard Specifications.

5. Permits

a. The Engineer and/or Contractor shall ensure that the proposed construction conforms to all local, state and federal regulations.

b. The preparation, submission, addressing comments and acquisition of any required permit shall be the responsibility of the Engineer and Contractor. At a minimum, the Contractor shall investigate and obtain the following potential permits:

i. Harford County Grading Permit
ii. Harford County Demolition Permit
iii. MDE Fuel Tank Removal Permit

6. Site Restoration

The site shall be restored to the grades which existed prior to abandonment. The entire area disturbed from the construction activity shall receive 4-inches of screened topsoil followed with seed and mulch in accordance with Section 2820 of the Standard Specifications.

P. Pump Station Upgrades and Retrofits

Periodically, a developer project or capital project will require the modification to an existing wastewater pumping station. Modifications may include but not be limited to: new pumps, motors, internal piping and valves, new electrical service, new generator, and automatic transfer switch, new controls, new ventilation system with odor control, new control building, new fencing, new access road, and new water service. All changes to the pumping station shall meet the current County Standards. The Division of Water and Sewer will evaluate on a case by case basis, the need for system replacements and upgrades due to increased capacity, increased flow, increase in odor, increase in vehicular traffic for maintenance and the potential for mechanical or electrical failure and sewage overflows.

1. General

   a. The extent and method of upgrade or retrofit shall clearly be shown on the construction drawings and specified in the project manual. The Engineer shall develop and provide a clear and concise sequence of construction in both the construction drawings and specifications.

   b. The design of all upgrades and retrofits shall be in accordance with all requirements in Chapter 6 and other applicable sections of the Design Guidelines.

   c. The Engineer shall meet with the County Project Facilitator to identify which components, if any, are to be salvaged and shipped to the Sod Run WWTP.

   d. The review and approval process of all upgrades and retrofits shall strictly follow the applicable sections of the “Developer-Built Pumping Station S.O.P. Construction Phase Approval Process”.

2. Salvaged Equipment

   a. The County Project Facilitator will provide the Engineer with a detailed list of items to be saved, protected, removed, and shipped to the Sod Run WWTP. Typical salvaged components may include: SCADA antenna, SCADA RTU, panel and radio, electrical panels, enclosures, external lights, generator, pumps, motors, impellers, blowers, dehumidifier, unit heater, manhole frame and cover and yard hydrant.

   b. The Contractor shall exercise the utmost care in removing salvaged components to prevent damage. Sufficient labor and machinery shall be used to safely remove and transport the components without damage.

c. Salvaged components shall be cleaned, packaged in boxes, crates or strapped to wooden pallets and delivered to the Sod Run WWTP. All components shall be stored in accordance with the manufacturer requirements and protected from moisture damage, vandalism, and theft. The Contractor shall be responsible for all security measures and shall insure the salvaged components. Delivery shall be scheduled through the Harford County Sod Run WWTP maintenance supervisor.

6.12 Force Main Design

A. Hydraulic Calculations

1. General

The design of a wastewater force main must be coordinated with the design of the wastewater pumping station. The proposed alignment and profile of the force main shall be developed. The profile shall depict the changes in force main elevations. The Engineer shall strive to achieve a vertical profile that rises continuously from the pumping station toward the discharge manhole. The system curve for the force main, showing the total energy losses associated with the range of possible pumping rates, shall be developed.

2. Size

The force main size shall be based on the required pipe's maximum carrying capacity to convey the design flow rate at permissible velocities, while minimizing life cycle costs including construction, maintenance and pumping costs.

3. Velocity

Design velocities in force mains shall generally be between 3 and 6 feet per second (fps). A minimum velocity of 3 fps-3.5 fps shall be required to re-suspend any solids within force mains that have multiple high and low points. The maximum velocity shall be based on the ultimate design pumping rate.

B. Force Main: Plan

1. When installed parallel to a water main, the force main shall be designed per the horizontal and vertical clearances indicated between water and sewer mains in Section 5.4, "Crossings and Clearances".

2. When installed parallel to an existing sewer pipeline, provide 5 ft. minimum horizontal clearance as measured from the outside edges of the pipes. In certain circumstances, the Division of Water and Sewer may require the 5 ft. spacing to be less. In these circumstances, the Engineer shall specify restrained joint pipe.

C. Force Main: Profile

The profile layout for a force main shall be as described for water main in Section 3.3.D, "Water Mains: Profile", with the following exceptions:

1. Ideally, the force main shall be designed without intermediate high points and with the top of the force main being below the hydraulic grade line at the minimum pumping rate so that air release valves will not be needed. If the elimination of high points is not feasible or if the design requires long, relatively flat vertical alignments, the design may require air release and air and vacuum valves.

2. Continuous uphill pumping shall be achieved, where the force main discharge point to the gravity sewer is at a higher elevation than the rest of the system, in order to keep the force main full.

3. Force mains with intermediate high points above the gravity sewer discharge point can create partial vacuum conditions in the force main under circumstances such as, draining conditions that occur due to intermittent pumping or when the HGL profile drops below the pipeline profile. The Engineer shall provide appropriate air release and air vacuum valves to protect the force main against damage under these conditions.

4. Downhill pumping is prohibited.

5. All force mains shall have a minimum 3.5' depth of cover. In street rights-of-way cover shall be measured from the top of the force main to the proposed grade, or in cases when the proposed grade is above the existing ground surface, the depth of cover shall be measured from the existing ground line. In easements across private property, future development in the area shall be given consideration when developing the force main profile and possible future development grades shall be evaluated to ensure that the minimum depth of cover is met. In situations where the force main parallels a water main, the force main depth shall be no less than 4.5 feet to avoid conflicts with water services.

6. The top of the force main and its appurtenances shall generally be designed to be lower than the HGL.

7. The following minimum information shall be shown on the profile:

    a. Existing and proposed utilities (longitudinal parallel utilities shall be "ghosted" in profile) including storm drains

    b. Road names

    c. Existing ground elevation line

    d. Proposed ground elevation line

    e. Existing and proposed road grade profile

    f. Areas requiring fill with certified compaction

    g. Centerline and name of intersecting streets

    h. Limits of restrained joint pipe

8. The Engineer shall clearly note that the construction of the proposed force main may not occur until the grade is within +/- 0.2 feet of finished grade.

D. Pipeline Materials

Force mains 4-inch in diameter and larger shall be DIP, minimum Class 52 and in accordance with the Standard Specifications. HDPE will be considered for force mains smaller than 4-inch in diameter.

E. Types of Joints/Fittings

Allowable pipe joints and fittings shall be as described in Chapter 3, "Water Main Design". Force mains shall be anchored at all fittings by restrained joints and buttress construction. The operating pressure and the surge pressure shall be considered in designing thrust restraint. See Section 5.9, "Thrust Restraint Design for Buried Piping" for analysis requirements.

F. Clearances

See Section 5.4, "Crossings and Clearances" of this manual for force main clearance requirements.

G. Appurtenances

1. Air Release and Air and Vacuum Valves

Force mains shall ideally be designed to rise continuously in profile from the pumping station to the point of discharge. To minimize installation and maintenance costs, the Designer shall evaluate the feasibility of eliminating intermediate high points by installing the main deeper below grade. Where this is not practical, the Designer shall include and automatic combination air and vacuum valves at the intermediate high points to expel accumulated air under pressure, to allow air into force mains to prevent vacuum conditions and expel larger quantities of air when the mains are filled. Air release and vacuum valves on wastewater force mains shall be specifically manufactured for wastewater service, be sized according to manufacturer's recommendations, and shall be placed in pre-cast manholes per the Standard Details.

2. Discharge Manholes

The connection between the force main and gravity sewer shall be designed with a discharge manhole. The termination of the force main in the discharge manhole shall be designed so that the force main will be flowing full at all times. See the Standard Details for discharge manhole details.

a. For new manholes, the interior of the discharge manhole shall receive 2 coats of a factory-applied polyamide coal tar epoxy for a total dry film thickness of 16- mils. Existing manholes shall be lined in accordance with the Division of Water and Sewer manhole lining specifications. Additional manholes further downstream may also require coatings. This determination will be made based on pipe slopes, flow and manhole spacing.

b. Odor control shall be provided at every discharge manhole. Odor control shall consist of a stainless steel insert dish with an activated carbon canister.

c. There shall be no branch laterals or SHCs at a discharge manhole.

H. Water Hammer

When the velocity of a fluid is changed, a phenomenon known as water hammer may result, leading to fractures of pipe and fittings and other damage. This condition is especially serious on long force mains or where static pumping heads are high.

The Engineer shall prepare a complete study of each force main design in conjunction with the related pumping station. A written detailed analysis along with supporting calculations shall be submitted to the Division of Water and Sewer for approval during the engineering report phase of the project. This analysis shall include, and is not necessarily limited to the following:

1. Transient pressures due to water hammer and the effect of these pressures on the entire system.
2. Investigation of the pipeline profile to determine the possibility of water column separation.
3. Reverse rotation characteristics of the pumps.
4. Shut-off characteristics of the proposed pump control valves.
5. A computer analysis of the transient pressures combined with the total system characteristics.
6. Substantiation for the use of surge valves, extra ordinary pipe supports and bracing, when necessary, listing recommended size and computed discharge pressures.

CHAPTER 6
APPENDIX

SPS-1	Typical Control Building Plan for Submersible, Suction Lift and Package Wet Well/Dry Well Sewage Pump Station
SPS-2	Typical Site Layout for Package Wet Well/Dry Well Sewage Pump Stations
SPS-3	Typical Upper Level Plan for Package Wet Well/Dry Well Sewage Pump Stations
SPS-4	Typical Section for Package Wet Well/Dry Well Sewage Pump Stations
SPS-5	Typical Site Layout for Submersible and Suction Lift Sewage Pump Stations
SPS-6	Typical Section for Suction Lift Sewage Pump Stations
SPS-7	Typical Suction Lift Wet Well Plan
SPS-8	Typical Site Layout for Submersible and Suction Lift Sewage Pump Stations
SPS-9	Typical Section for Submersible Sewage Pump Stations
SPS-10	Typical Upper Plan for Submersible Sewage Pump Stations
SPS-11	Typical Lower Plan for Submersible Sewage Pump Stations

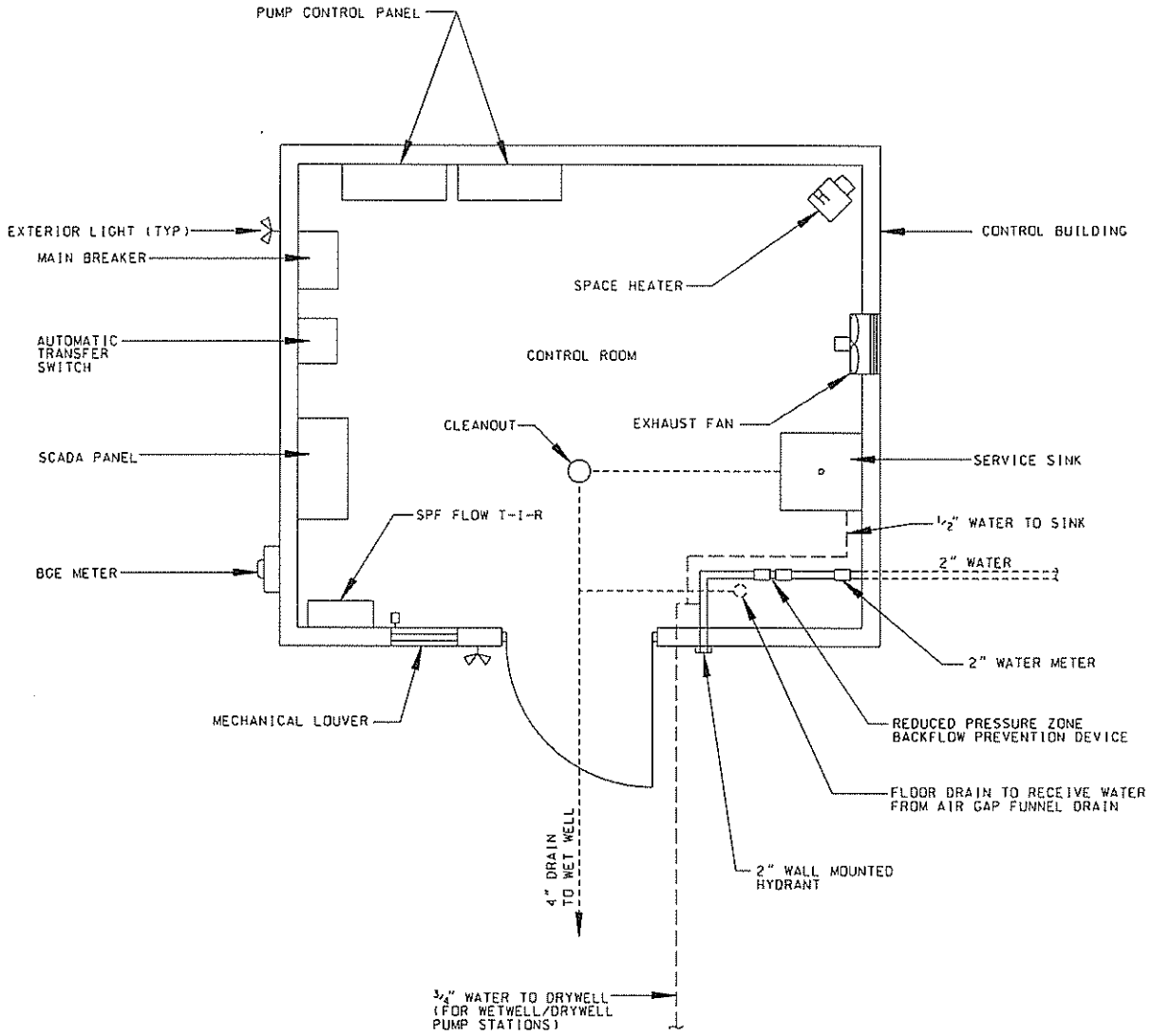

NOTE: AN AIR GAP FUNNEL DRAIN OR 4" X 6" REDUCER AND DRAIN PIPING SHALL BE PLACED BENEATH THE BACKFLOW PREVENTER TO DRAIN THE FULL FLOW OF THE 2" SERVICE LINE IN CASE OF FAILURE.

HARFORD COUNTY, MD DEPARTMENT OF PUBLIC WORKS	DESIGN GUIDELINES	APRIL 2006
	TYPICAL CONTROL BUILDING PLAN FOR SUBMERSIBLE, SUCTION-LIFT AND PACKAGE WET WELL / DRY WELL SEWAGE PUMPING STATION	SPS-1

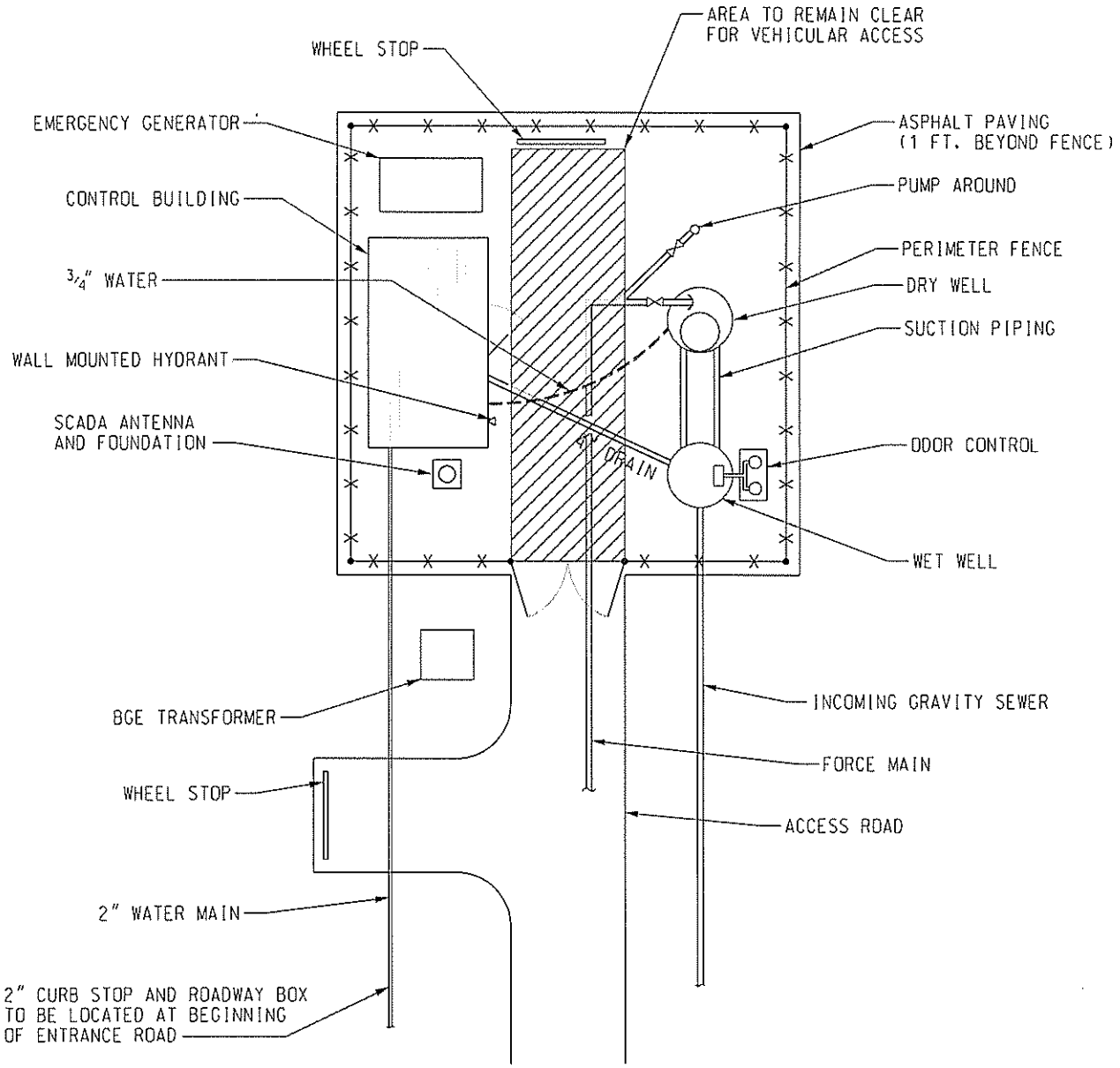

NOTE: A YEAR-ROUND SCREEN, AROUND THE PUMP STATION SITE, SHALL BE PROVIDED BY MEANS OF TREES AND SHRUBS IF REQUIRED BY THE DIVISION OF WATER AND SEWER

HARFORD COUNTY, MD DEPARTMENT OF PUBLIC WORKS	DESIGN GUIDELINES	APRIL 2006
	TYPICAL SITE LAYOUT FOR PACKAGE WET WELL / DRY WELL SEWAGE PUMPING STATIONS	SPS-2

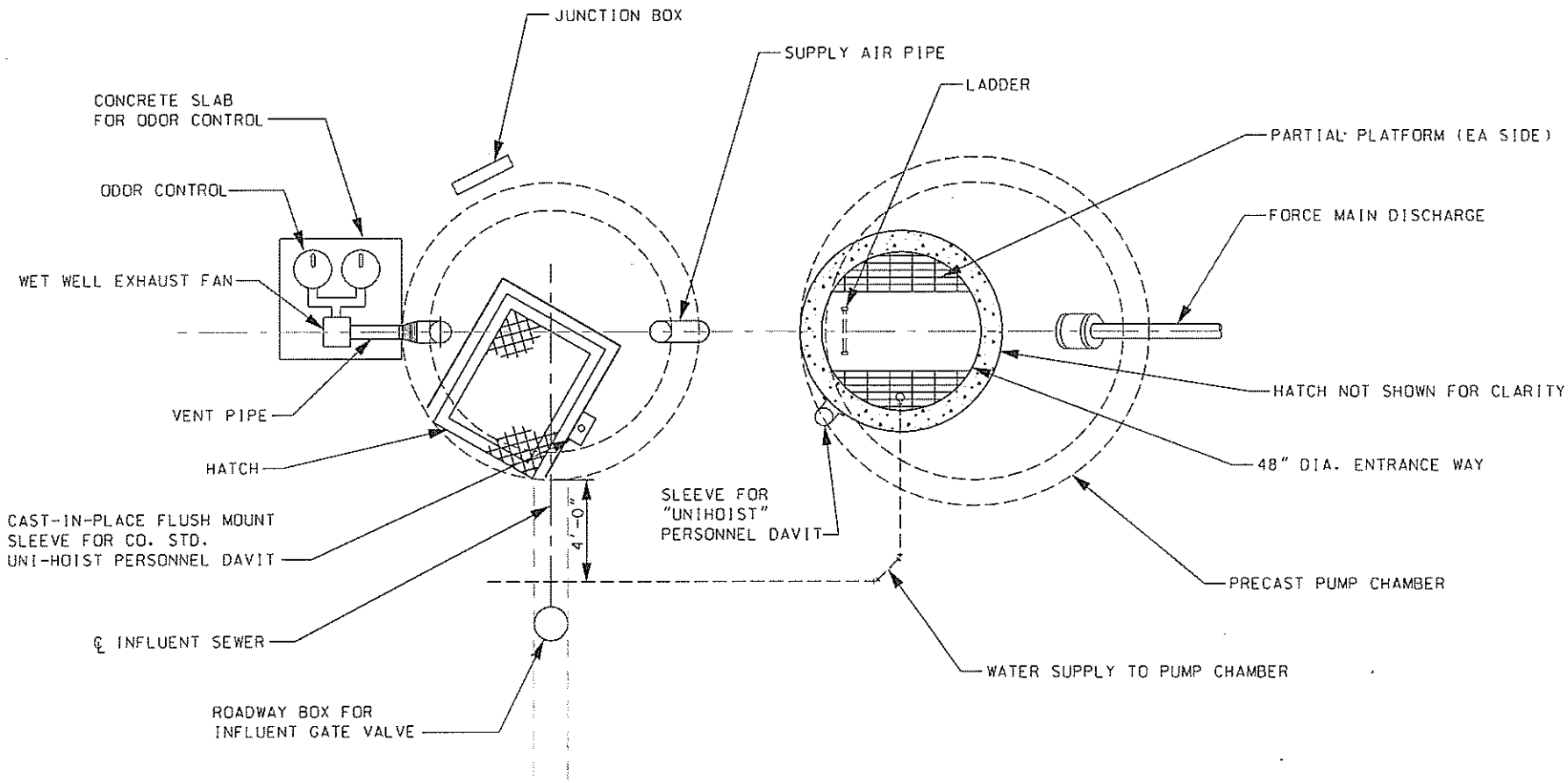

HARFORD COUNTY, MD DEPARTMENT OF PUBLIC WORKS	DESIGN GUIDELINES	APRIL 2006
	TYPICAL UPPER LEVEL PLAN FOR PACKAGE WETWELL / DRYWELL SEWAGE PUMPING STATIONS	SPS-3

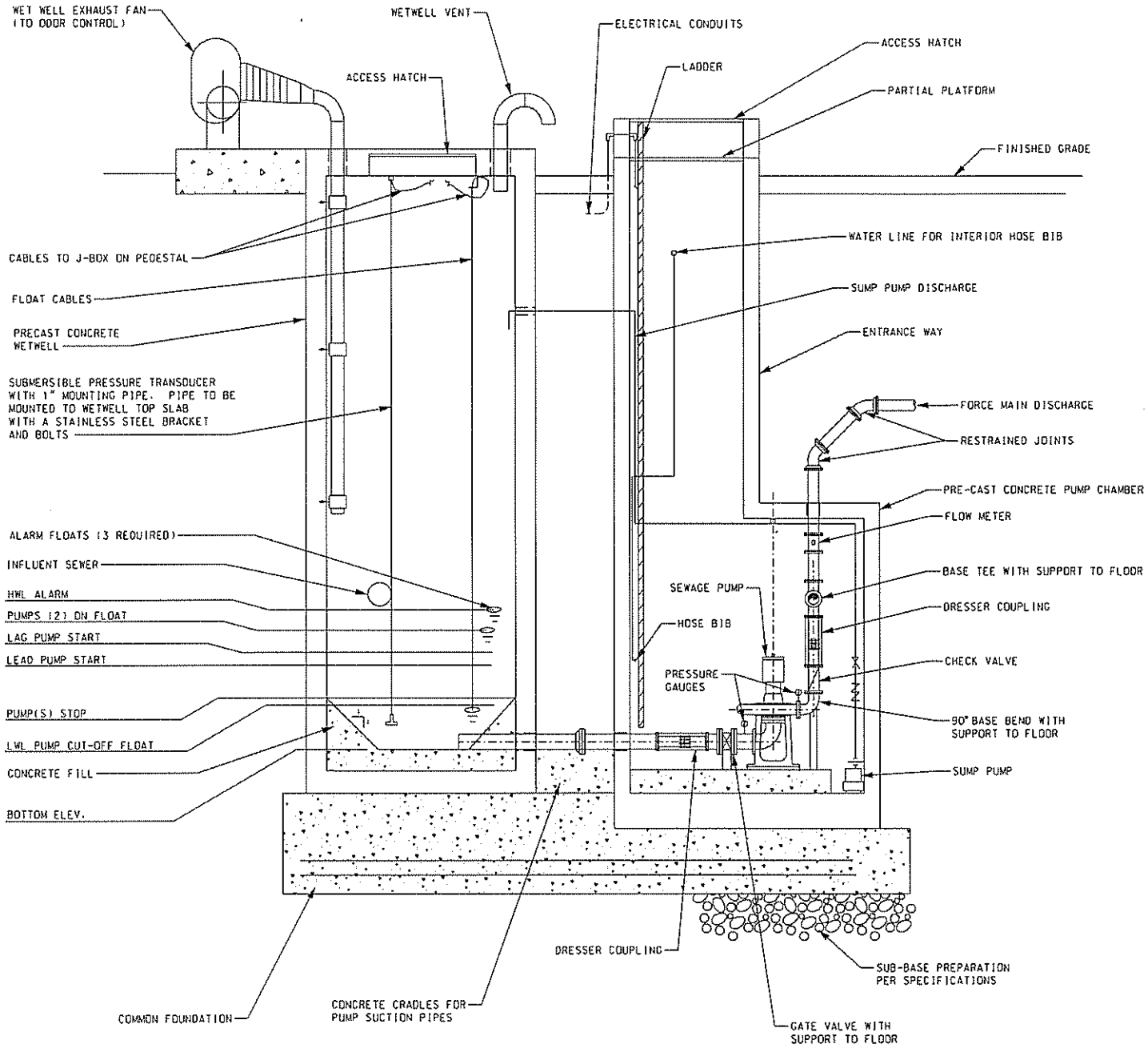

HARFORD COUNTY, MD DEPARTMENT OF PUBLIC WORKS	DESIGN GUIDELINES	APRIL 2006
	TYPICAL SECTION FOR PACKAGE WET WELL / DRY WELL SEWAGE PUMPING STATIONS	SPS-4

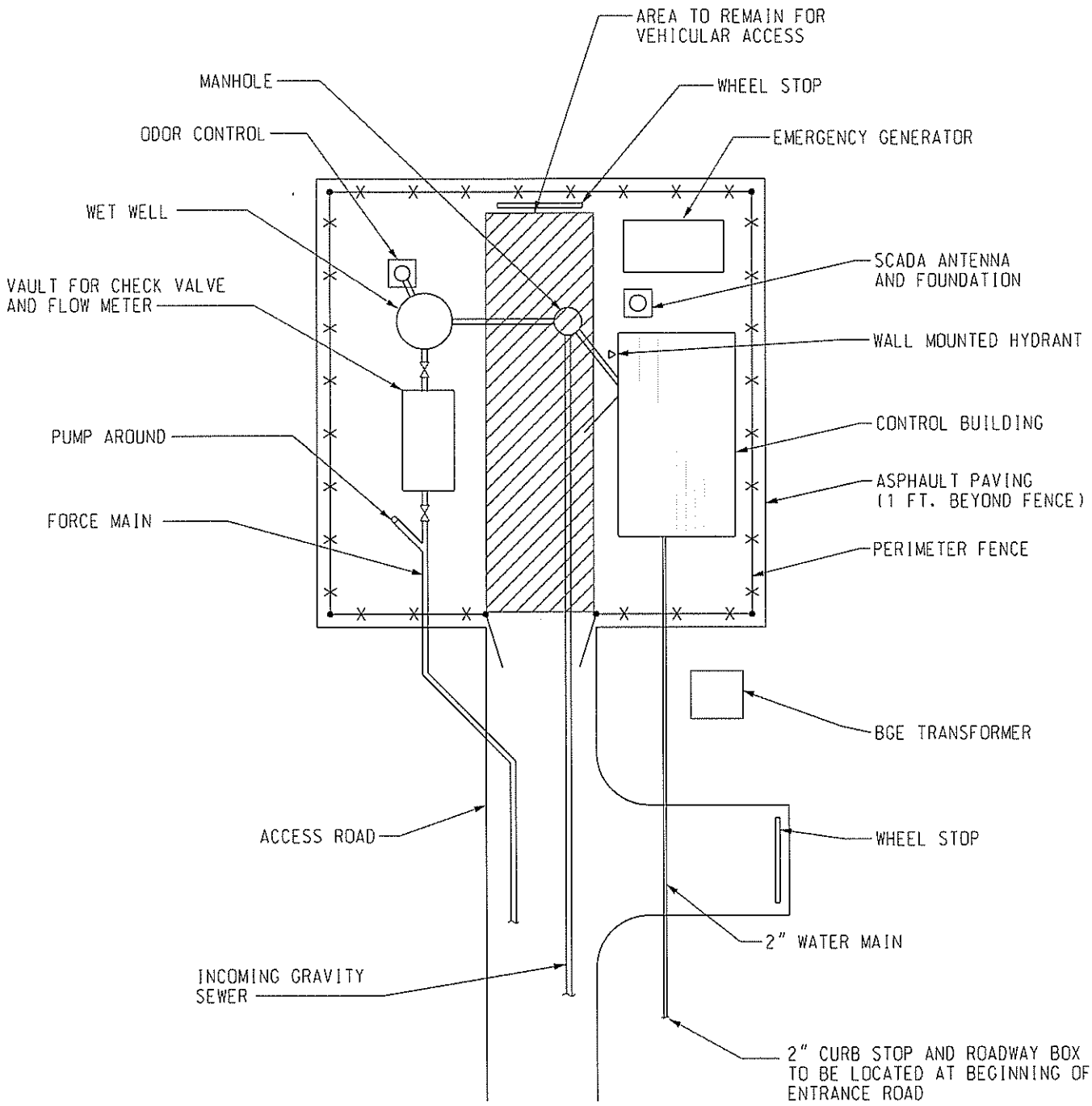

NOTE: A YEAR-ROUND SCREEN, AROUND THE PUMP STATION SITE, SHALL BE PROVIDED BY MEANS OF TREES AND SHRUBS IF REQUIRED BY THE DIVISION OF WATER AND SEWER

HARFORD COUNTY, MD DEPARTMENT OF PUBLIC WORKS	DESIGN GUIDELINES	APRIL 2006
	TYPICAL SITE LAYOUT FOR SUBMERSIBLE AND SUCTION LIFT SEWAGE PUMPING STATIONS	SPS-5

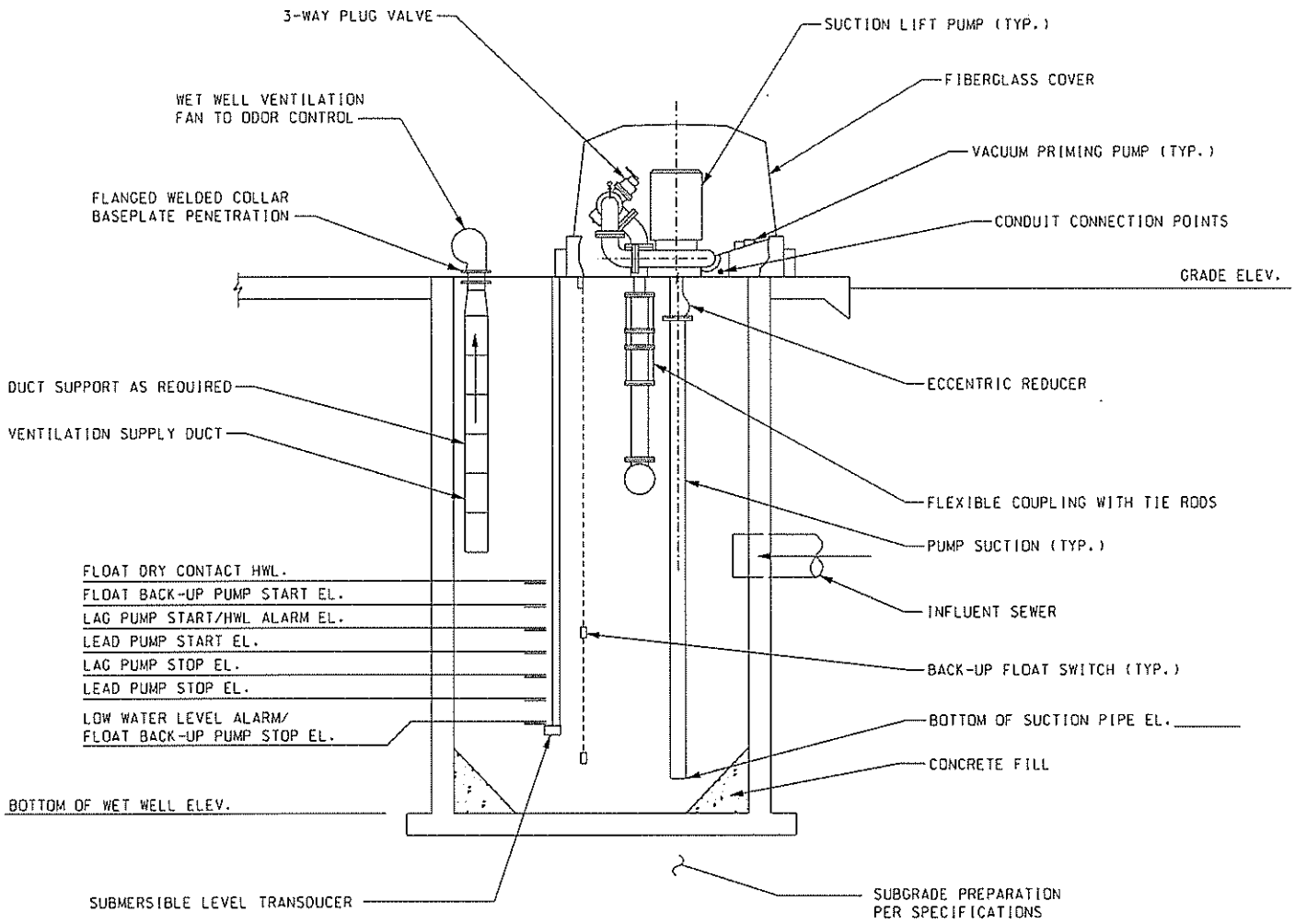

HARFORD COUNTY, MD DEPARTMENT OF PUBLIC WORKS	DESIGN GUIDELINES	APRIL 2006
	TYPICAL SECTION FOR SUCTION LIFT SEWAGE PUMPING STATIONS	SPS-6

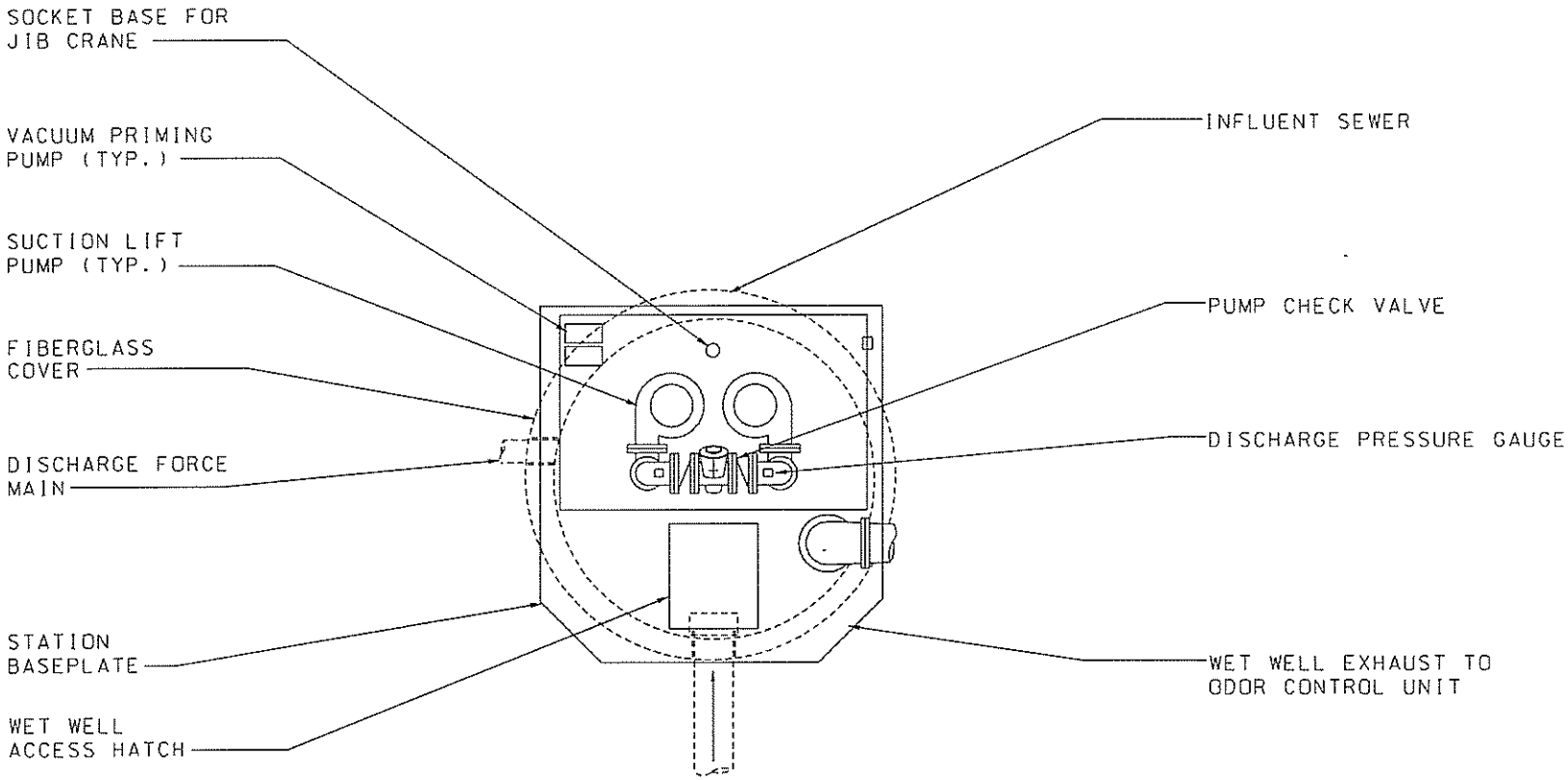

HARFORD COUNTY, MD DEPARTMENT OF PUBLIC WORKS	DESIGN GUIDELINES	APRIL 2006
	TYPICAL SUCTION LIFT WET WELL PLAN	SPS-7

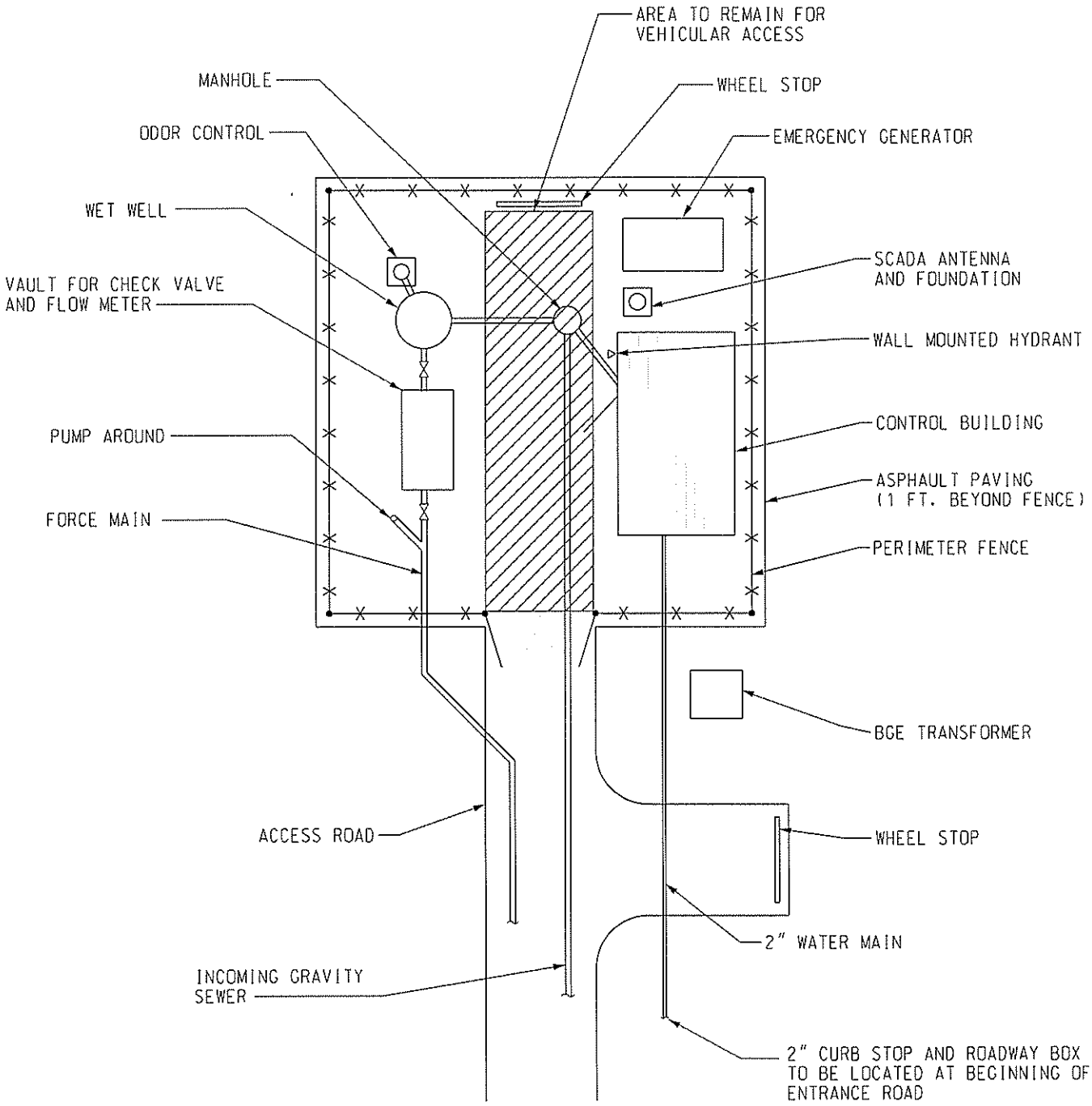

NOTE: A YEAR-ROUND SCREEN, AROUND THE PUMP STATION SITE, SHALL BE PROVIDED BY MEANS OF TREES AND SHRUBS IF REQUIRED BY THE DIVISION OF WATER AND SEWER

HARFORD COUNTY, MD DEPARTMENT OF PUBLIC WORKS	DESIGN GUIDELINES	APRIL 2006
	TYPICAL SITE LAYOUT FOR SUBMERSIBLE AND SUCTION LIFT SEWAGE PUMPING STATIONS	SPS-8

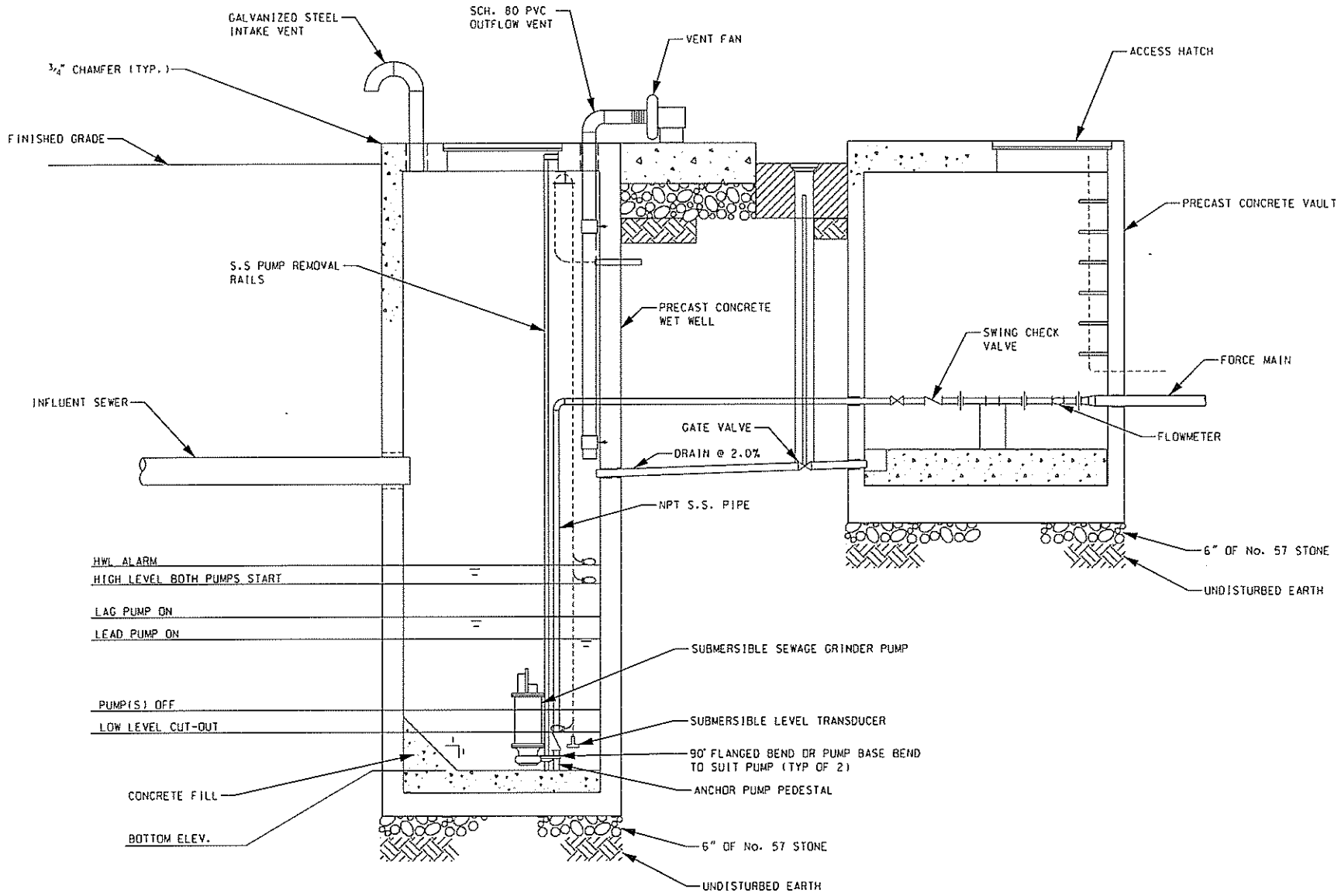

HARFORD COUNTY, MD DEPARTMENT OF PUBLIC WORKS	DESIGN GUIDELINES	APRIL 2006
	TYPICAL SECTION FOR SUBMERSIBLE SEWAGE PUMPING STATIONS	SPS-9

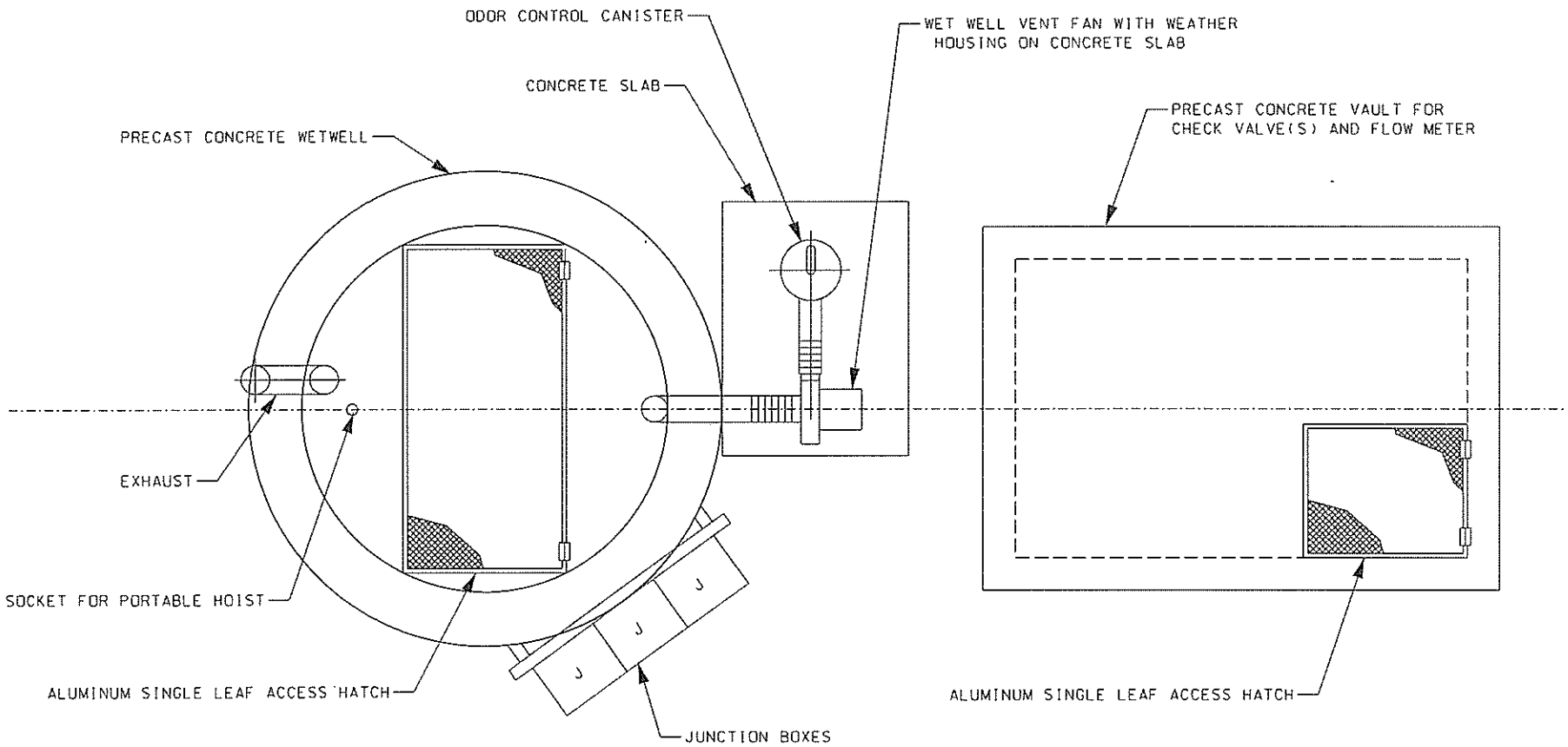

HARFORD COUNTY, MD DEPARTMENT OF PUBLIC WORKS	DESIGN GUIDELINES	APRIL 2006
	TYPICAL UPPER PLAN FOR SUBMERSIBLE SEWAGE PUMPING STATIONS	SPS-10

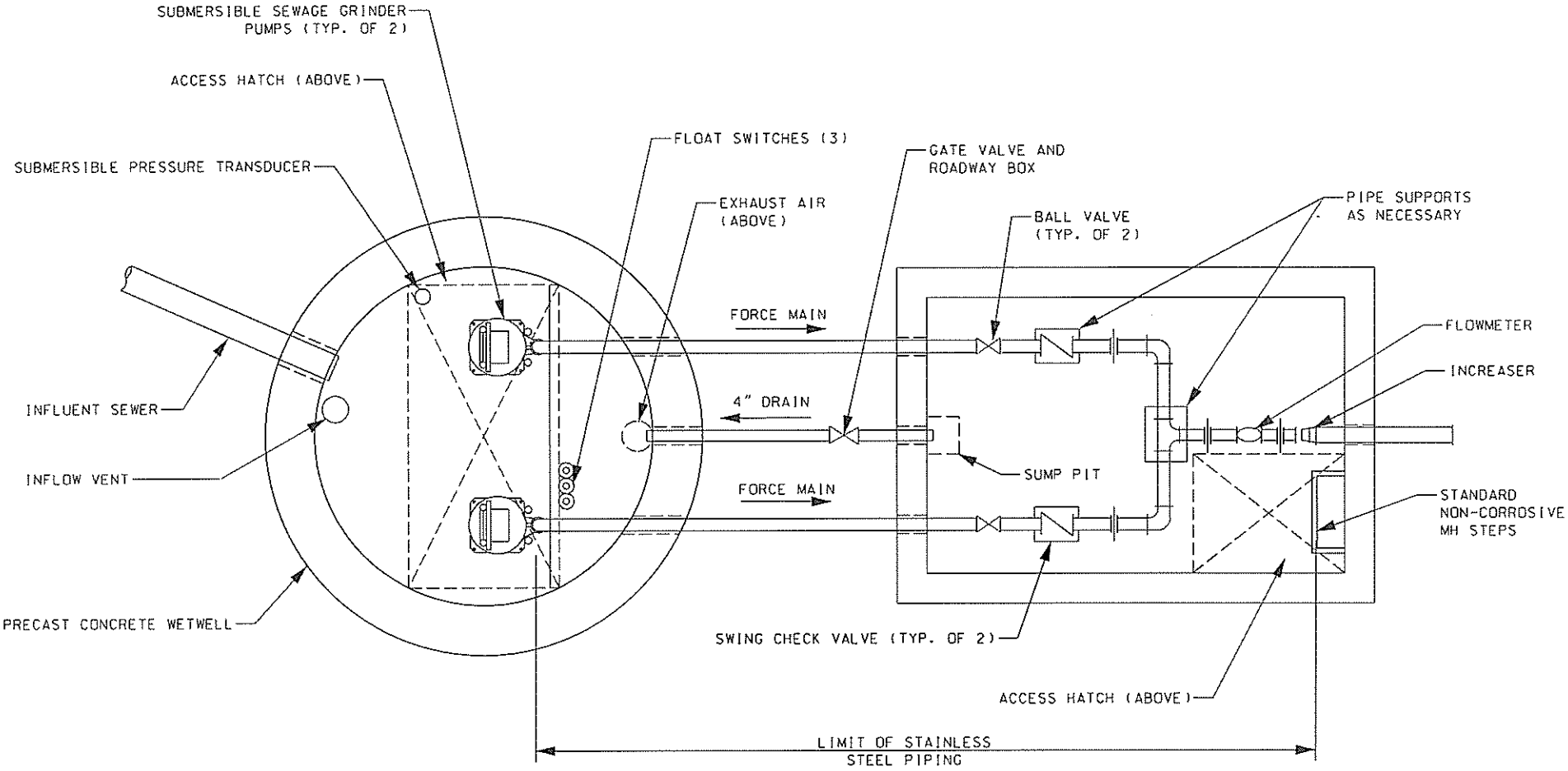

HARFORD COUNTY, MD DEPARTMENT OF PUBLIC WORKS	DESIGN GUIDELINES	APRIL 2006
	TYPICAL LOWER PLAN FOR SUBMERSIBLE SEWAGE PUMPING STATIONS	SPS-11

CHAPTER 7

WATER BOOSTER STATION DESIGN

CHAPTER 7
WATER BOOSTER STATION DESIGN

Page No.

7.1 General **25-169**
A. Responsibility of the Engineer 25-169
B. Policy 25-169
C. Harford County Project Facilitator 25-169
D. Construction Drawings 25-170
E. Contractor Pre-Qualifications 25-170

7.2 Abbreviations **25-170**

7.3 Definitions **25-170**

7.4 Regulations **25-171**

7.5 Permits and Approvals **25-171**

7.6 Design Phases **25-171**
A. Preliminary Engineering 25-171
B. Pre-Design Meeting 25-171
C. 95% Design Submittal 25-172
D. 100% Design Submittal 25-172
E. Pre-Construction Meeting 25-172

7.7 Types of Water Booster Stations **25-173**

7.8 Hydraulic Computations **25-173**
A. Design Flow Rate 25-173
B. Number of Pumps 25-173
C. Hydraulic Analysis 25-173
D. Pump and System Curves 25-173
E. Water Hammer 25-174
F. Pump Selection 25-174

7.9 Design Criteria to be Shown on Construction Drawings **25-174**
A. Projected Water Demands 25-174
B. Pumping Unit 25-175
C. Storage 25-176
D. Address 25-176

7.10 Pumping Station Design **25-176**
A. Site Design 25-176
B. Equipment 25-181
C. Electrical and Controls 25-188
D. Painting, Coating and Tagging 25-200
E. Shop Drawing Submittal 25-200
F. Operation and Maintenance Manual 25-201
G. As-Built Drawings 25-202
H. Spare Parts 25-202

CHAPTER 7
WATER BOOSTER STATION DESIGN

7.1 General

A. Responsibility of the Engineer

This Chapter addresses the selection and use of design criteria and practices applicable to the design of water booster station projects in Harford County. Furthermore, this Chapter only addresses water booster stations for developer projects in which the water is being pumped into a closed system (ie. there are no receiving elevated water storage tanks). The design of system-wide water booster stations, which pump water from one water zone to another is beyond the scope of these design guidelines. The subject matter includes the circumstances in which the Division of Water and Sewer will consider water booster stations, the layout of booster station sites, the selection and employment of pipeline materials, mechanical pumping equipment, ventilation systems, control building, electrical supply and systems, controls and instrumentation and telemetry and associated ancillary work for a complete system. While the requirements described for the various aspects of design will include and cover the majority of conditions encountered, there is no intention to relieve the Engineer the responsibility to recognize when conditions are not favorable for the application of standards.

Harford County approval of the plans and specifications does not relieve the Engineer of the responsibility for errors or omissions in preparing the design. In particular, such issues may include but not be limited to pump capacity, fire fighting capability, water hammer, cavitation and electrical conditions.

B. Policy

Water booster stations shall be considered when the final grade at the curb stops within the proposed subdivision will have an elevation above the maximum service elevation as presented in Section 3.3A. The Division of Water and Sewer will determine on a case by case basis the need for a water booster station based upon the number of lots above the maximum service elevation. If a water booster station is not required by the Division of Water and Sewer, all homes built within the lots above the maximum service elevation shall have individual booster pumps and hydropneumatic tanks installed as presented in Section 3.5C.

C. Harford County Project Facilitator

The Division of Water and Sewer has assigned an engineer to be the Project Facilitator for developer-built pumping stations. The role of this staff member is to facilitate and expedite Harford County's technical review and approval of the design and to coordinate the County construction approval process. The assignment of the project facilitator in no way relieves the Developer or Developer's Engineer from properly managing and coordinating the construction of the booster station and associated schedule so that the booster station will be fully tested and operational prior to any plumbing connections required. All

technical matters related to the design and construction shall be first directed to the developer's engineer and the developer's engineer shall immediately inform the project facilitator. Standard operating procedures have been developed for the construction approval process. The most current version of this document shall be included within the specifications.

D. Construction Drawings

The water booster station shall be on a separate set of construction drawings, separate from all other water and sewer drawings.

E. Contractor Pre-Qualifications

The selected bidder shall be pre-qualified with the Harford County Department of Procurement, under Section M, Pumping Stations. The selected bidder shall not assign the Contract. All major subcontractors involved with the major mechanical, electrical and structural components of the station must also be pre-qualified with Harford County for their respective responsibilities.

7.2 Abbreviations

Abbreviations used in this chapter or other chapters are located in Chapter 1 of this manual.

7.3 Definitions

Average Day Demand: The water used during the Average Day expressed in gallons per day (gpd) or million gallons per day (mgd) or divided by 1,440 minutes and expressed in gallons per minute (gpm).

Design Flow Rate: The minimum flow rate required to satisfy the following demand and pressure conditions during a 24-hour period, expressed in gpm or mgd:

Maximum Day Demand:	40-60 psi at curb at the highest elevation within the proposed service area.
Peak Hour Demand:	40-60 psi at curb at the highest elevation within the proposed service area.
Maximum Day Rate + Fire Flow Rate:	20 psi minimum at curb

Fire Flow Rate: The flow rate of water necessary to fight a fire in a given service area as determined by the guidelines in Chapter 3 of these Design Guidelines.

Maximum Day Demand: The volume of water used during the Maximum day expressed in gallons per day (gpd) or million gallons per day (mgd) or divided by 1,440 minutes and expressed in gallons per minute (gpm).

Peak Hour Demand: The Average Day Demand multiplied by the peaking factor during the hour of the day with the highest demand based on the diurnal pattern for the respective water zone.

7.4 Regulations

Water booster stations must satisfy the regulations of agencies having jurisdiction. Water booster stations shall comply with all relevant guidelines issued by the Maryland Department of Environment and Ten States Standards. Buildings shall comply with applicable Harford County building code requirements as adopted by the Department of Inspections, Licenses, and Permits (DILP). Other regulations governing facilities and construction shall be adhered to, including regulations published by the Maryland Occupational Safety and Health (MOSH), the National Fire Protection Association (NFPA), National Electric Code (NEC), Harford County Plumbing Code and others as applicable.

7.5 Permits and Approvals

See Section 5.15, "Permits and Approvals" in this manual for applicable permit requirements. In addition, for any above ground structure, the Engineer shall make all applications for and obtain the required building and grading permits prior to bidding of the project.

7.6 Design Phases

A. Preliminary Planning

Prior to Preliminary Plan approval, the Engineer shall prepare a detailed service area study, in accordance with the requirements in Chapter 2, Engineering Evaluations, for review and approval by the Division of Water and Sewer. The engineering evaluation shall include a property-specific topographic map indicating all of the properties to be served by the proposed booster station. The evaluation shall include computations showing the derivation of the proposed and ultimate design flows. Upon request, Harford County will supply GIS information to assist the Engineer. The proposed booster station shall meet all requirements of the Adequate Public Facilities Ordinance (Harford County Code Section 267-104).

B. Pre-Design Meeting

Prior to commencing the design for the water booster station, the engineer shall hold a pre-design meeting with the Division of Water and Sewer to review the following:

1. Proposed service area
2. Proposed water main layout
3. Booster station site layout
4. Fireflow requirements
5. Design criteria
6. Review submittal requirements
7. Controls and instrumentation
8. Telemetry radio path study and other requirements

C. 95% Design Submittal

1. When the plans and specifications are 95% complete, the Engineer shall submit seven (7) sets of paper prints and three (3) sets of specifications to the Division of Water and Sewer for review and comment. The Engineer shall also submit the following computations in the form of an Engineering Evaluation:

    a. Derivation of average day, maximum day and peak hour demands
    b. Computer model with input and output results which prove the design criteria can be met within the proposed service area
    c. Hydropneumatic tank sizing
    d. Electrical demands

2. The plans and specifications shall present complete, bid-ready plans and specifications.

3. The Division of Water and Sewer engineering, maintenance and operations will review and comment on the plans and specifications. Once the review comments have been submitted to the Engineer, the County Project Coordinator will schedule a meeting with the Engineer to discuss the comments.

4. If in the judgment of the Division of Water and Sewer, the submittal is lacking sufficient detail expected in a 95% submittal, the drawings will be returned to the Engineer.

D. 100% Design Submittal

1. Once all of the 95% County comments have been addressed, the engineer shall submit the 100% mylars along with the original mark-ups, with one set of 100% specifications.

2. The Division of Water and Sewer will coordinate and track the review and signature of the 100% mylars and specifications.

E. Pre-Construction Meeting

Prior to the pre-construction meeting, the Engineer shall distribute 7 sets of plans and specifications to the Division of Water and Sewer.

7.7 Types of Water Booster Stations

All water booster stations (including pumps, piping, hydropneumatic tank, and equipment) shall be completely above-ground, housed within a water booster station building.

7.8 Hydraulic Computations

A. Design Flow Rate

Water booster stations shall be designed to satisfy the design flow rate conditions for existing and future water demands. Flow rate computations shall follow guidance given in Chapters 3, "Water Main Design", and Chapter 5, "Common Design Guidelines" of this manual.

B. Number of Pumps

Water booster stations shall be capable of pumping the design flow rate (domestic and fire) with the largest single pump out of service.

C. Hydraulic Analysis

Water booster stations must hydraulically satisfy the design flow rate of the proposed system. The Engineer shall perform a complete computer hydraulic analysis of the water booster station and water distribution system by computer modeling software such as Haested Methods, EPA Net, KYPIPE, or H_2O Net.

D. Pump and System Curves

The Engineer shall develop a system curve for each design condition, as determined by the Hazen-Williams formula for piping head loss. The system curves shall be based on a C-factor of 120. The following system curves shall be shown on the construction drawings, drawn to scale:

1. Maximum Day Demand for the design year with elevated tanks full.
2. Maximum Day Demand with elevated tanks at bottom of operating range.
3. Average Day Demand with elevated tanks full.
4. Average Daily Demand with elevated tanks at bottom of operating range.

The selected manufacturer's pump curve for both the domestic and high capacity pump shall be carefully plotted and overlain on the system curves. The pump curves shall include both the low and high end of the proposed pump speed to be controlled by variable frequency drives. If the pump curves for the fire pump is substantially greater than the domestic pumps, a separate curve at a larger scale shall be drawn for the domestic pumps.

E. Water Hammer

The Engineer shall evaluate if water hammer or damaging pressure surges will result from the closing of the check valve(s) on the water main and appurtenances. Water hammer is typically a concern under high static head conditions. The Engineer shall incorporate special provisions in the design to overcome the surge pressure if the combined effects of static head and water hammer exceeds the design working pressure of the weakest component in the piping system by a safety factor of 1.1. In such circumstances, as shown above pertaining to damaging surges and the Engineer shall re-evaluate pipe size and velocities, or select an appropriate device to control the water hammer. Such devices may include hydraulically operated, time adjustable, pump check service valves and spring-type, oil-cushioned elbow hydraulic surge relief valves.

F. Pump Selection

The pump selection shall not create unacceptable system conditions on the suction side of the booster station. These conditions include pressures less than 28 psi at the curb stops and pressure surges. The Engineer shall perform a net positive suction head available (NPSHA) analysis and include this information in the Engineering Evaluation. The NPSHA shall be calculated for the expected design flows and shall exceed the pump manufacturer's requirements by an added margin of safety of not less than five (5) feet. Pumps shall be selected to have their maximum efficiency at the operating point. Under no circumstances shall a pump be specified to operate at very low flows and high heads, near shutoff heads, or "runout" conditions (maximum possible flow rate of the pump). These conditions can result in excessive hydraulic loading or cavitation damage to impellers, casings and shafts, rapid bearing and mechanical seal wear, and high vibration.

7.9 Design Criteria to be Shown on Construction Drawings

The following design criteria shall be shown on the Contract Drawings:

A. Projected Water Demands

1. Average Day Demand

    a. Residential

        i. Breakdown of number of units, by type and phase.
        ii. Total projected contributing population based upon total number of units.
        iii. Average day demand based upon population projection.

b. Commercial

i. Area of land broken down by type of zoning.

ii. Average day demand based on acreage.

c. Industrial

i. Area of land broken down by type of zoning.
ii. Average day demand flow based on acreage.

2. Maximum Day Demand

Total of all average flow peaked in accordance with the peaking factors presented in Chapter 3, “Water Main Design”.

3. Peak Hour Demand

The maximum hourly demand within the 24-hour diurnal pattern.

4. Fire Flow

a. Maximum Fire Flow and duration for the ultimate service area..

B. Pumping Unit

1. Number of pumping units.

2. Type and size of pumping units including proposed manufacturer(s) and model #(s).

3. Projected flow capacity and head of each pumping unit.

4. Impeller size of pumping unit. (The recommended impeller shall not be the maximum permissible size for the specified pumping unit unless future growth within the drainage area, consistent with the Master Land Use Plan does not require future booster station upgrades)

5. Horsepower, speed, and efficiency for each motor (all motors shall have a high efficiency rating not less than 90%).

6. Display pump curves and system curves and resultant design point. Identify Hazen-Williams C-factor used to develop system curve and type of pipe proposed. Present pump curves and resultant operating conditions with multiple pumps running.

7. NPSHA and NPSHR.

8. Minimum efficiency at design point.

9. Upgrades necessary for future demand conditions (i.e. pump size, impeller size, motor size, operating conditions). The design shall allow for an increase in impeller size, motor size and other conditions to accommodate future flow conditions.

C. Storage

Size and type of hydropneumatic tank.

D. Address

Provide pumping station street address.

7.10 Pumping Station Design

A. Site Design

1. Location

Booster station locations (including emergency generator) shall conform to the Harford County subdivision regulations and zoning code. A minimum 200 foot set-back to residential property boundaries is preferred due to noise, generator, fan and lights.

2. Land Acquisition

The land required for the booster station, including the necessary vehicular access routes to an existing or proposed public right-of-way shall be dedicated to Harford County Government in fee simple. In determining the space requirements for the facility, particular attention shall be given to the width of the strip of land for the access road to ensure adequate space for grading and drainage.

The access road may not serve as a multi-use purpose, such as being coupled with access to the stormwater management facility or with a private driveway. A completely separate access road shall be provided to the pump station.

3. Site Plan

Two site plans shall be developed as part of the site design. One plan shall be drawn at a scale of 1” = 50’ and shall be included with the water main plan sheets. In reference to the booster station site, the site features including access drive, pump and control building, telemetry antenna and generator shall be shown.

The other site plan of the pump station site shall be drawn at a scale of 1" = 10' and shall show all proposed above and below ground facilities. The site plan shall also show the existing and proposed contours (with 1 foot contour interval) landscaping and sediment control (for capital projects).

The location of all proposed facilities required for the pumping station site shall be clear and concise to permit a field stakeout from the plan information. A stake out table listing all components of the proposed pump station site, along with their corresponding survey coordinates shall be provided on the construction drawings. As an alternate to using coordinates to stake out the pumping station, the location of the proposed facilities may be projected from a baseline established from the traverse shown on the plan. The baseline shall be located so that it will not be disturbed from the proposed construction. At a minimum, the following items shall be shown for stake-out:

a. manholes
b. pump and control building
c. generator
d. telemetry antenna
e. fencing
f. access road geometry
g. piping and appurtenances

4. Floodplain

Water booster stations shall be located outside of the 100-year floodplain elevation.

5. Wetlands

The pumping station site shall be located outside of the 25-foot wetland buffer and preferably outside of the 75-foot wetland buffer.

6. Site Paving

Paving shall be provided within the booster station site to provide vehicular access for routine maintenance, and access to the hoist and rail, by-pass pumping facilities, doorways, and telemetry antenna.

7. Grading

Grades for paved areas at the booster station site shall prevent local ponding, and provide positive drainage away from structures. The grading of the land beyond the perimeter fence shall not exceed 3:1 slopes. ~~4:1~~ Maximum slopes of 4:1 are desirable. Lesser slopes wherever possible are preferred. Site grading design shall be compatible with the slope stability of the soil type encountered. Slope stabilization techniques shall be appropriate for the degree of slope and soil type. The use of retaining walls adjacent to the booster station site is not permitted without written authorization.

8. Entrance Road

a. The plan of the entrance road shall show the centerline with horizontal geometry including PC's, PTs, curve data and road stationing.

b. A profile of the entrance road shall be shown on the construction drawings. Centerline road stations shall be provided along with tangent grades and vertical curve data.

c. Vehicular access shall be provided to every pumping station site by means of a paved entrance road. All entrance roads and tee turn arounds shall be a minimum of 12-feet wide and be paved in accordance with the Harford County Road Code Standard Detail R-1 and R-1a.

d. A vehicular turn-around shall be provided outside of the perimeter fencing in front of the pump station site. The minimum radius of the fillet turn-around shall be 15-feet.

e. The maximum grade of the road shall be 10 percent. A minimum 2-foot grassed shoulder shall be provided on either side of the road. The roadway pavement shall be crowned and not super-elevated. Accommodations for drainage shall be provided on both sides of the road by means of open ditches. If drainage must cross the road, it shall do so beneath the road within a culvert.

f. The horizontal and vertical geometry of the entrance road shall accommodate the backing-in of a County dump truck with the "Blue Brute" portable booster pump. (See section 12 below) The entrance road shall also accommodate diesel fuel delivery trucks.

g. A guardrail shall be designed adjacent to the entrance road when the slope from shoulder of road is steeper than 4:1 or the vertical distance to a level area is eight (8) feet or greater.

h. If required by the Division of Water and Sewer, an access drive barrier in accordance with Standard Detail G-17 shall be provided approximately fifteen feet after the beginning of the entrance road. The access drive barrier shall be identified in the appropriate plan view(s). In some cases, the Division of Water and Sewer may require the planting of trees and/or shrubs adjacent to the access drive barrier to deter unauthorized vehicles from driving around the barrier.

9. Landscaping

a. Landscaping in the form of trees and/or trees and shrubs shall be included as part of the booster station site plan if required by Division of Water and Sewer. Generally, landscaping will be required when the proposed booster station site will be within direct view of existing and proposed residential dwellings. The purpose of the plantings is to provide a year-round screen around the booster station site.

b. If plantings are required by the Division of Water and Sewer, a landscape plan shall be prepared showing the planting arrangement of the trees and shrubs, identifying each by both genetic names and common names, and specifying size and installation details. Landscaping plants shall be aesthetically pleasing and require minimal maintenance (watering, fertilizing, trimming, etc.). The use of White Pine is prohibited. The landscaping plan shall be a part of the construction drawings.

c. If space requirements do not allow the planting of trees and shrubs, the Division of Water and Sewer will consider allowing the use of green fence slats, especially manufactured to have the appearance and texture of a “hedge”.

10. Site Fencing

Generally, water booster station sites shall be enclosed with a six (6) foot high chain link fence in accordance with Standard Detail G-13. A fourteen (14) foot wide double wide swing gate shall be integrated into the fencing with 180 degree wing hinge. A 3-foot wide personnel gate shall also be provided. On a case by case basis, alternate fencing types may be considered by the Division of Water and Sewer if they provide the necessary level of security. If chain link fencing is waived, the generator shall be enclosed within the control building within a separate room.

11. Site Lighting

Booster station sites shall be illuminated with a motion-activated twin floodlight. The floodlights shall be heavy duty with a built-in photo cell that activates the motion sensor at darkness. When motion stops, the lights shall remain on for a minimum of 5 minutes. Lamps shall be 150W incandescent. The lighting shall be sufficient to fully illuminate the fence enclosure area. A switch shall be provided which is capable of de-activating the motion sensor.

12. Pump-Around

The design shall include a pump-around for the purpose of pumping from the suction side of the station to the booster service area by means of a portable above-ground pump (Blue Brute). The pump around shall be accomplished by installing a fire hydrant on the exterior suction piping and a fire hydrant on the discharge water main. The description of this feature is provided in Section B.6 below. The layout of these fire hydrants shall allow the portable pump to be positioned within the site paving or entrance road with no more than 50 feet of hose between the fire hydrants and portable pump location. Buried, resilient seated gate valves shall be capable of isolating the suction and discharge piping from the booster station.

13. Pump Room and Control Building

A pump room and control building shall house the pumps, hydropneumatic system, controls, and emergency generator. Each building may have its interior or exterior orientation configured differently to match the location and application.

The control building may be either pre-fabricated or built on-site. The walls of the building shall be constructed of masonry units with a brick veneer. The architectural style and coloring of the building exterior shall be aesthically pleasing, shall blend into the community and shall appear as a residential dwelling. The floor shall consist of a minimum 4-inch thick reinforced concrete slab with appropriate concrete reinforced footings. The roof of the building shall be the gable type with soffit overhangs on either side. The roof joists, rafters and sheathing shall all be of wood construction. The sheathing shall receive minimum 30 pound building paper followed by minimum 40-year asphalt-fiberglass shingles. An aluminum drip edge shall be provided. A continuous ridge vent shall be installed at the roof peak and the prefinished aluminum soffit vent shall be installed under the eaves of the roof. Both roof ends of the building shall be clad with wood sheathing, building paper and vinyl lap siding. All fascia shall be covered with painted, maintenance-free aluminum trim. Both sides of the roof shall have pre-finished aluminum gutters and downspouts with pre-cast concrete splashblocks. The interior ceiling of the control building shall contain 5/8” drywall (painted with 2 coats of white semi-gloss

latex paint) with batt insulation rated for a minimum R-Valve of R-30. The entry shall receive a double 3' – 0" x 6' 8" door with lock keyed to the County's cyber-lock system. The side of the building shall also have two double doors as high as the overhead rail to allow passage of pumps and equipment outside. The interior of the building shall be heated with an electric unit heater(s) controlled by a thermostat to maintain a minimum temperature of 55 degrees F. Ventilation shall be provided by means of wall mounted exhaust fans with backdraft dampers operated by thermostats and freeze stats and intake louvers with motor operated dampers. The exhaust of the fans shall not be directed towards adjacent homes. The air flow from the exhaust fans and vents shall not be directed over chemical storage and chemical feed systems. All louvers shall also have insect screens. The interior of the building shall be well lighted by means of a minimum of two twin-bulb 48-inch fluorescent lighting fixtures. Windows shall not be provided for security reasons, however, the exterior brick work shall be designed to provide the architectural impression of windows. The floor of the control building shall contain floor drains to collect condensation and leakage if it occurs. The floor shall be sloped ¼-inch per foot towards the floor drains. The building shall be equipped with a rail and hoist assembly to lift and remove the pumps and motors from the building to a vehicle located outside of the building. The rail shall extend a minimum of 10 feet beyond the face of the exterior building wall.

14. Sanitary Sewer Service

Sanitary sewer service shall be provided for all water booster stations. With the exception of roof drains, all drains shall be directed into the sanitary sewer service.

B. Equipment

In accordance with the Maryland Code of Regulations, all equipment, materials and appurtenances that come in contact with water intended for use in the public water supply shall meet the applicable American National Standards Institute (ANSI)/NSF International (NSF) Standards for direct or indirect drinking water additives and be compatible with chlorine concentrations of 5 mg/l.

1. Pumping Units

   a. Water booster stations shall have domestic pumps to provide service for the domestic water demands. As previously noted, the domestic pump shall be capable of pumping the maximum day and peak hour demands with the specified criteria with the largest pump out of service. Two fire pumps shall also be provided for the purpose of satisfying the fire flow requirements.

b. The domestic pumps shall be controlled with Variable Frequency Drives (VFDs) in order to minimize the amount of storage required in the hydropneumatic tank. The domestic pump(s) shall be designed to run, matching system demands with the VFD during the higher daytime demands (ie. 5am-9pm). During the evening hours (ie. 9pm-5am) the pumps shall cycle on and off with a greater frequency not to exceed a maximum of 6 cycles per hour.

c. The fire pumps shall also be controlled with variable frequency drive.

d. All VFDs shall include phase monitors.

e. All pumps shall rotate clockwise as viewed from the motor end. Pump bearings shall have a minimum 100,000 hours ABMA-10 bearing life. Pump motors shall operate on 460 volt, 3 phase, 60 cycle electrical service and at a speed no greater than 1780 rpm. Pump discharge velocities shall be between 3 and 15 feet per second. Pump inlet pressure shall be maintained at a sufficient level to avoid cavitation. Domestic pump suction pressure shall not be less than 28 psi. Fire pump suction pressures shall not be less than 20 psi. Pump motor horsepower shall be sufficient to prevent motor overload under all possible conditions. Water pumps and motors shall be suitable for continuous duty. All pumps shall be factory witness tested and approved with certified pump curves prior to shipment. Water pumps shall meet the requirements of the Hydraulic Institute for vibration. Vibration tests shall be performed on-site by an independent laboratory approved by the Division of Water and Sewer at the contractor's expense.

f. Domestic pumps shall be end-suction (horizontal). The fire pumps shall be in-line split case (horizontal).

g. The pump casing/volute, impeller, seal housing and motor housing shall be made from cast iron. The pump impellers shall be bronze for the domestic pumps and 316 stainless steel for the fire pumps. The pump casing and impeller shall be fitted with replaceable hardened bronze or stainless steel wear rings to maintain sealing efficiency between the volute and the impeller. Pumps shall also have:

   i. stainless steel shaft
   ii. NSF – approved fusion bonded epoxy coating on the interior surfaces.
   iii. flexible shaft coupling and removable OSHA – compliant shaft guard.
   iv. mechanical shaft seals cooled and lubricated with potable water. (domestic pumps)
   v. packed seals (fire pumps)

vi. premium efficiency motors for a 3-phase pump motors.
vii. Sealed bearings without grease fitting plugs.

2. Hydropneumatic Tanks

a. Water booster stations shall contain a hydropneumatic tank. The tank is a steel pressure vessel which contains both air and water. The purpose of the hydropneumatic tank is to provide the necessary system pressure and instantaneous flow in the evening hours when the domestic pumps are not operating continuously. The tank shall be sized so that the domestic pumps do not cycle more than 6 times per hour during the evening hours.

b. Calculations for Tank Sizing

1. As noted above, the maximum number of pump cycles per hour during the low demand conditions (9pm – 5am) shall be six.

2. The Division of Water and Sewer will provide the Engineer with the diurnal peaking factor to use to determine the low demand condition.

3. Utilizing the information in item 1 and 2 above, the engineer can determine the minimum water storage volume. Note this water storage volume represents the "usable" volume within the hydropneumatic tank. Actual water volume may be greater, depending on the control set points.

4. The minimum volume of air required within the hydropneumatic tank shall be based on Boyles law as follows:

Va = min. air volume, gallons, at maximum tank pressure

Vs = min. water volume as noted in item 3 above.

$psia_1$, $psia_2$ = min. and max. tank pressures

$$Va = \frac{Vs\ (psia_1,\ psia_2)}{1 - (psia_1,\ psia_2)}$$

5. Total minimum volume of the hydropneumatic tank shall be the combination of Vs and Va.

c. Tank Requirements

Conventional tanks shall be of welded steel construction and shall be designed, fabricated, tested, certified and stamped according to section VIII, Division 1 of the ASME Boiler and Pressure Vessel (BPVC) Code. The tank shall be provided with structural base supports capable of supporting the weight of the tank full of water. The tank shall be installed completely above-grade and housed within the pump/control room. The tank shall be furnished with a standard 24-inch access opening and cover, a drain connection, a pressure gauge connection, a pressure transmitter connection, connections for inserting water level probes, a water inlet/outlet connection, and a connection for a pressure relief valve. The pressure relief valve shall be installed on the top of the tank and shall be capable of relieving pressure if the pressure in the tank is more than 10 percent, or 5 psi above the maximum design set pressure, whichever is greater. The tank shall be furnished with a water level gauge and gauge glass protector. Vertical tanks over 6 feet tall shall have steel ladders welded to the exterior of the tank.

The interior and exterior of the tank shall be coated with the following coating system. All surfaces shall have a shop surface preparation of SSPC SP-10 and prime coated immediately thereafter. Welds, beads and blisters shall be first ground smooth. Additionally, pits and dents shall be filled and other imperfections removed. The coating system shall consist of a polyamide cured epoxy having a minimum volume solids of 43 percent on the prime coat. The prime coat shall be a minimum 3 mils dry film thickness (DFT) with two finish coats 3 mils (DFT) minimum each, for a total minimum DFT of 9 mils. The entire interior of the tank shall undergo holiday testing by an independent testing company.

The tank shall be fully enclosed within 2-inches of rigid foam insulation followed with a vapor barrier jacket to prevent condensation.

The hydropneumatic tank shall be disinfected in accordance with the latest version of AWWA C 652. After the disinfection process, bacteriological and Volatile Organic Compound (VOC) samples shall be taken by a State-Certified sampler and analyzed by a State-Certified laboratory. The sample results shall be submitted to MDE for authorization to place the tank into service.

d. Isolation

The hydropneumatic tank shall be capable of being isolated for maintenance purposes. The water booster station shall be capable of being run in manual mode during tank isolation.

3. Air Compressor

Booster stations shall be furnished with oil-less air compressors. The air compressor shall fully recharge the air within the hydropneumatic tank within one hour and shall operate the tank isolation valve. The air compressor shall be supplied as a package from the supplier, complete with motor, air compressor with one redundant compressor, air receiver, controls, in-line air filter, vibration isolators, electrical control panel, base, v-belt drive, OSHA belt guard, after cooler, intake filter silencer, centrifugal unloader and other appurtenances necessary for a complete system. The unit shall also contain an electronic condensate drain valve of the pilot-operated diaphragm valve type with manual push to test feature, safety relief valve and pressure gauges. A quick-release shall be provided for a portable compressor in case of unit failure. An isolation valve shall be provided in order to operate the portable air compressor.

4. Hydropneumatic Tank Isolation Valve

The hydropneumatic tank shall be capable of being completely isolated during the operation of the high capacity pump. Isolation shall be accomplished by means of a pneumatic cylinder operated butterfly valve installed on the inlet/outlet piping to the hydropneumatic tank. The butterfly valve shall be equipped with a pneumatic cylinder operator with open/close actuator controls and shall be of the short body design. The pneumatic cylinder operated valve shall be furnished with position limit switches. The pneumatic cylinder operator shall meet the requirements of AWWA C504 and have cylinder barrels constructed of stainless steel. The butterfly valve shall be complete with all necessary pilot solenoid valves, speed control valves, filters, strainers, pressure gauges and other incidentals. The pneumatic cylinder operator shall be provided with a manual override hand wheel for the condition if air pressure is not available. Pneumatic valve control shall be arranged so the valves fail safe “closed” upon power or air loss.

5. Valves

a. Yard Valves

Exterior valves shall be buried resilient seat gate valves in accordance with the Standard Specifications and Details.

b. Interior Valves

Each pump shall have isolation valves to permit the removal or maintenance of the pumps and hydropneumatic tank without affecting the operation of the remaining pumps. Isolation valves shall be non-rising stem resilient seat gate valves with hand operator. Valves 3-inch and smaller shall be PVC schedule 80

such as Nibco Chemtrol, ¼-turn with Viton O-rings, or equal. Each pump shall have an air cushioned swing check valve. If water hammer or surge pressures are a concern, the Engineer shall consider hydraulically-cushioned swing check valve or pneumatically operated cone valve.

6. By-Pass

As previously noted, water booster stations shall be provided with by-pass connections in the form of two (2) fire hydrants, one on the suction and one on the discharge piping respectively. There shall be isolation valves adjacent to each hydrant to isolate the booster station during by-pass operations. Hydrants shall be stenciled in paint suction and discharge respectively. The fire hydrants shall be located within the paved area to allow easy connection to the County's portable pump which is mounted on a trailer. Vehicular access shall have provisions for the backing-in of the portable pump with the fire hydrants on either side of the pump. The suction fire hydrant shall be located on the passenger side of the vehicle and the discharge fire hydrant shall be located on the driver's side of the vehicle. The hydrants shall be rotated so they will face the portable pump. The portable pump utilizes the 4-inch steamer nozzle on each fire hydrant.

7. Flow Metering

All water booster stations shall have neoprene-lined magnetic flow meters. The flow tube shall be stainless steel of adequate strength to withstand the working pressure multiplied by a factor of safety of 1.5. The meter shall have an accuracy of +/- one percent of the specified full scale reading. Maintaining continuous zero stability shall be an inherent characteristic of the flow metering system to eliminate the need to zero-adjust the system with a full pipe at zero flow. The components of the metering system (flow meter, indicator, recorder and totalizer) shall be the product of one manufacturer and shall be factory calibrated, tested, and certified for accuracy. All flow meters shall have an adequate straight run of pipe both upstream and downstream of the meter to achieve the above accuracy in accordance with the manufacturer's recommendations. A 7-day 3 pen (1 pen for pressure, 1 pen for domestic pump, 1 pen for fire pump) circular chart recorder with the following: totalizer in 1000 gallons, domestic and fire pump reading (gpm), and discharge pressure (psi). The Engineer shall specify that a spool piece be provided with the same lay length as the flow meter so that the flow meter may be taken out of service for repair or replacement.

Reserve space shall be provided on the panel in the event of the need for a future chlorination system. The space shall accommodate a circular chart recorder for chlorine residual monitoring.

8. Interior Piping

All interior piping shall be DIP Class 52 minimum, with flanged fittings. Flanges shall be integrally cast on pipe or factory assembled screwed-on with proper bonding compound. Flexible couplings shall be provided on the suction and discharge of every pump, interconnections between the suction and discharge header, and other locations in which piping interconnects between two fixed points.. The arrangement of piping and equipment within the pump room well shall be made with adequate space for maintenance, repair, removal or replacement of equipment, as well as to safeguard personnel working in the booster station building. Piping shall be adequately supported. Piping 6-inches and smaller may be supported with steel saddles, stanchions and floor flange. Piping larger than 6-inches shall be supported with cast-in-place concrete piers. Control and instrumentation piping shall be copper or stainless steel.

If a service line is required by the Division of Water and Sewer for sampling and/or chemical feed, a reduced pressure zone backflow prevention device with anti-siphon shall be installed on the service line, prior to the water using fixtures.

9. Pressure Gauges

Pressure gauges for the direct reading of line conditions shall be placed on both the suction and discharge of each pump and on the main suction and discharge header piping after the last pump. Pressure gauges shall be liquid-filled and have a minimum 3-1/2” diameter face and be equipped with snubbers and diaphragms. Accuracy shall be to within 0.5% of pressure. The pressure gauges shall have a range in pressure such that the normal operating pressure is near the middle of the gauge.

10. Chemical Addition

If required by the Division of Water and Sewer, a disinfectant shall be injected into the discharge piping of the domestic pumps. The disinfectant shall be either direct injection of liquid sodium hypochlorite pumped from on-site bulk storage tanks or direct injection of a mixture of oxidants by means of an on-site mixed oxidant generator (using sodium chloride salt, water, and electricity).

All chemical feed equipment shall be contained from spillage by means of a concrete containment wall. If required by the Maryland Department of the Environment, a separate room and ventilation shall be provided to house the chemicals and feed equipment.

The sodium hypochlorite system shall include a cross-linked high density polyethylene bulk storage tank, two adjustable electromagnetic metering pumps (material valve drives) suitable for delivering a sodium hypochlorite solution up to 15% in strength. Injection piping shall be schedule 80 PVC. All brackets and hardware shall be stainless steel. The on-site mixed oxidant generator system shall include a water softener, brine tank, oxidant tank, electrolytic cells, power supply/rectifier, PLC control panel, brine proportioning pump, metering pump (similar to sodium hypochlorite system) and ultrasonic level sensor for oxidant tank. Initiation of metering pumps shall be by means of a paddle switch.

In all cases, if chemical addition is not required, the Engineer shall design the layout of the booster station building to accommodate a sodium hyplochlorite chemical feed system in the future. The location of the chemical feed equipment shall be within close proximity to the main entrance. Space requirements would include 2 drums of sodium hypochlorite, a scale and metering pump.

C. Electrical and Controls

1. Electrical Design

All electrical designs and components shall be in strict accordance with all applicable National Codes, County Codes and BGE requirements. Electrical design shall be such that phase out protection shall be provided so that the power will automatically switch off in the event of a loss of any one phase. Incoming electrical service shall be underground with electric meters installed on the exterior of the pumping station building or control building. All exterior above-ground electrical equipment shall be housed in at least a NEMA 3R enclosure and be U.L. listed. All electrical equipment within the control building shall have at least a NEMA 1 rating. The electrical plans shall include, but not be limited to, the following:

a. Complete plan layout indicating all conduit, wire sizes and equipment locations including lighting and other appurtenances. Incoming electrical service on the pumping station site shall be underground and within concrete encased conduits.
b. Installation details of equipment that are wall mounted, or suspended from the ceiling or otherwise required for clarity.
c. Single line diagrams incorporating all electrical components required for operation of the facility.
d. Complete lighting schedule noting model, size, location and installation data as well as appurtenances.
e. Complete control and telemetry diagrams.
f. Elevation of control panels with equipment and mounting dimensions and notes identifying each component.
g. Complete circuit breaker schedule indicating size and identifying each circuit.

h. Ventilation schedule noting fan size, operating conditions, location, model, installation data, etc. The ventilation schedule shall also outline louver data including size, material, fixed or motorized.

i. Secondary power facilities and alarm equipment shall be designed so that they may be manually activated for periodic maintenance checks to ensure proper operation.

j. Provide a legend of all symbols used for the above.

2. Lightning and Surge Protection

The Engineer shall specify a lightning arrestor and surge protection be provided at the pumping station, including the control building, telemetry antenna, and emergency generator. The proposed lightning and surge protection shall comply with the latest editions of all applicable codes and standards.

3. Uninterceptable Power Supply (UPS)

Most programmable functions within pumping stations contain non-volatile memory which does not lose memory during power loss. A UPS shall be provided for any feature which is not EPROM- based or has volatile memory with a capacity to last a minimum of one hour.

4. Backup Power Supply

All water booster stations shall be equipped with a complete and operable emergency/standby electric generating system. The system shall be located within the control building and meet all Harford County building codes. The system shall be capable of automatic and manual start-up and cut-in operation. The unit shall be adequate to provide power for pumping, lighting, ventilation systems and such other systems affecting reliability, capability and safety. Installation shall be in accordance with applicable National Electric Code Articles and all local and Maryland State requirements. System performance shall be in accordance with applicable NFPA Standards. All water booster stations which require 3-phase electrical service shall incorporate a phase monitor in the back-up power supply system.

a. The emergency power generator shall be a single diesel engine driven electric generator complete with control devices, batteries, battery charger, exercise clock, main line circuit breaker, exhaust silencer, vibration isolators, weather resistant housing and a fuel system. The engine generator set shall be an assembled and tested product of an established manufacturer that has been in continuous production of units of the required size and type for a period of not less than five years.

b. The generator set manufacturer shall have a maintenance and service organization local to the Harford County area, where skilled, factory-trained personnel are available on a 24-hour basis.

c. The engine generator set shall meet all the requirements of Maryland State Department of Health and Mental Hygiene Regulation 10.03.35, Rules and Regulations Governing the Control of Air Pollution in the State of Maryland.

d. After installation, the manufacturer shall provide the services of a capable service engineer to conduct a final test and instruct the County operating personnel. The County shall also be provided with factory test data indicating that the unit has the specified capacity and is capable of delivering full load continuously. All fuel, lubricating oil antifreeze solution, electrical instruments and equipment required for the test shall be furnished by the Contractor. The Contractor shall fill the fuel tank after testing.

e. The diesel engine shall be a watercooled, multi-cylinder of the compression ignition, solid injection type. The maximum speed of engine in the service anticipated shall not exceed 1800 rpm. The lubricating system shall be of the forced feed type.

f. The diesel engine shall operate satisfactorily on a commercial grade of #2 diesel fuel oil.

g. Fuel Storage Tanks – Fuel storage tanks shall be of the size and type shown on the table below according to the size of the generator. All belly-type tanks shall be double-walled.

Generator Size	Minimum Tank Size	Tank Type
Up to 45 KW	175 gals	belly tank, above grade
45 to 100	260 gals	belly tank, above grade
over 100	550 gals (see note below)	steel, above grade

Note: If required by the Division of Water and Sewer, the fuel storage shall be sized for 24-hour continuous service.

If the generator design does not allow a belly tank to be installed, the location of the tank shall be as directed by the Division of Water and Sewer. All generator fuel tanks shall be installed above ground. Double containment shall be provided for the fuel tank in accordance with Local, State and Federal Regulations.

h. The diesel engine shall be complete with all fluids, filters and the industry standard engine governor, engine mounted water heater and safety shut-offs.

i. Exhaust Silencers – All generator sets shall have a critical type ~~of~~ exhaust silencer which shall be constructed of stainless steel. All piping from the manifold, including the muffler, shall be stainless steel.

j. Sound Attenuation – Sound attenuation enclosures may be required as determined by the Division of Water and Sewer on a case by case basis.

5. Electrical Conduit

All underground electrical conduit shall be rigid galvanized conduit (rgc). Interior electrical conduit may be either electrical metallic tubing (emt) or rgc. All ground penetrations shall include flexible expansion couplings to account for potential settlement.

6. Controls

a. General

The pump operation of the water booster station shall be accomplished by means of the telemetry programmable logic controller (PLC), U.S. Filter LC-3000 or most current. The pump control of the domestic pumps shall be completely independent of the pump control of the high capacity pump. The PLC for the fire pumps shall also control the hydropneumatic tank isolation valve.

b. Domestic Pump Operation

The following presents the normal automatic control of the domestic pumps:

The PLC shall monitor the liquid level and pressure within the hydropneumatic tank. The lead pump shall be energized when the tank pressure falls to a point equal to the lead pump start set point. The VFD shall control the speed of the domestic pump to maintain the hydropneumatic tank water level within the specified range. Initially, when the pump turns on, the VFD shall run the pump at the minimum speed. If the water level does not rise or maintain the same level, the pump speed shall be increased to match the system demand. As the water level approaches the pump stop setting, the pump speed shall be decreased incrementally. The domestic pump speed shall be minimum when the water level reaches the lead pump stop set point.

If the pressure within the tank is below the pump stop operating pressure when the lead pump stop set point is reached, a pressure transmitter shall signal the PLC to open a solenoid valve in the compressed air line and then close the solenoid valve when the desired air pressure has been obtained at the pump stop water level. To prevent air locking of the hydropneumatic tank, the compressed air-supply solenoid valve shall be inoperative unless the water level in the tank is at the lead pump stop point. The lead pump and lag pump shall automatically alternate after every pump cycle.

c. Fire Pump Operation

A PLC shall monitor the station discharge pressure from the domestic pump. When the domestic pump discharge pressure is reduced to a pre-set low discharge pressure, indicating a system demand beyond the capabilities of the domestic pump, the PLC shall initiate a delay timer. After the expiration of the set time, if the discharge pressure remains below the set point, the PLC shall close the hydropneumatic tank isolation valve and start a fire pump. The starting of a fire pump shall initiate a cycle timer (pump shut down timer) which will prevent a premature pump shutdown to ensure adequate pump cycle time and to prevent nuisance start/stops. The lead pump and lag pump shall automatically alternate after every pump cycle.

During such an event, the domestic pumps shall continue to operate to fill the hydropneumatic tank until the tank is full.

The fire pump speed shall be varied by the VFD through the PLC in order to maintain an adjustable set point discharge pressure. Flow shall be monitored and totalized during operation of the fire pumps.

The fire pump shutdown sequence shall be initiated based on a reduction of discharge flow of a pre-set point. This reduction in flow indicates decreased system demand to a point where the domestic pumps are capable of meeting the system demand. A timer shall be initiated when the flow reaches the set point. If, after the expiration of time, the flow remains below the set point, the PLC shall open the hydropneumatic tank isolation valve and shutdown the fire pump.

When the fire pump is running, controls shall prevent exercising of the emergency generator.

d. Low Suction Pressure

The PLC shall monitor the suction pressure of the main coming into the booster station. When the suction pressure is reduced to a point below a pre-set low suction pressure, and after a pre-set time delay, both the domestic and fire pumps shall shut down or disengage from starting up. Simultaneously the hydropneumatic tank isolation valve shall be closed.

7. Telemetry System

A. General

1. The design of all booster stations shall include a telemetry system for the purpose of remote monitoring and control.

2. The Engineer shall be responsible for all facets of the project related to the telemetry system including: radio path study and testing and design.

3. The radio path study, including table top study and field tests shall be reviewed and approved by the Division of Water and Sewer prior to the first submittal of the construction drawings and specifications. Approval of the construction drawings will be contingent upon Harford County review and approval of the final report.

B. Description of Telemetry System

1. The existing telemetry system, manufactured by U.S. Filter Control System, has the capability of transmitting and receiving analog and status signals from a variety of geographically distributed locations throughout the County, by means of UHF/VHF radios.

2. The radio network consists of a master site and over 15 remote terminal units (RTU).

a. The master site is located at the Abingdon Water Treatment Plant.

b. The repeater sites are typically located at the major water booster stations.

c. The remote terminal units are located at the water storage tanks and smaller water booster stations.

For water booster stations the following minimum inputs shall be provided to the RTU:

Discrete Inputs

1. Loss of power
2. Domestic Pump 1 fail
3. Domestic Pump 1 run
4. Domestic Pump 2 fail
5. Domestic Pump 2 run
6. Fire Pump 1 fail
7. Fire Pump 1 run (High priority alarm)
8. Fire Pump 2 fail
9. Fire Pump 2 run (High priority alarm)
10. High discharge pressure alarm
11. Low suction pressure alarm
12. Automatic transfer switch in emergency position
13. Generator Run
14. Generator Fail
15. Intrusion
16. Isolation valve open
17. Isolation valve closed
18. Pump room flood
19. Low tank level
20. Metering pump on/off (if required)
21. Low or high compressor pressure alarm

Analog Inputs

1. Station flow
2. Station discharge pressure
3. VFD speed domestic pumps
4. VFD speed high capacity pump
5. Compressor air tank pressure
6. Chlorine residual (if required)

Each RTU has a radio housed in a NEMA 4 fiberglass enclosure with a PLC, emergency power, emergency power charger, heater, and other necessary appurtenances.

3. All radios shall have 12dB forward gain antennas attached to pressure treated wooden masts. The minimum power capacity to the antenna shall be 1000 watts. Impedence shall be 50 ohms. The maximum diameter of the antenna pole which is attached to the mast shall be 2-inches. The antenna shall be designed for frequencies between 166 and 174 MHz. The maximum height of the wooden mast shall not exceed 40 feet. The mast and antenna system shall be protected from lightning in accordance with NFPA 780 and be able to withstand a maximum wind load of 100 mph.

4. All new installations require re-programming the master station with revised and/or new display screens. These revisions are beyond the scope of these design guidelines and will be addressed on a case by case basis for each project.

5. All new installations require an amendment to the current Harford County radio license. It will be the developer or his designated representative's responsibility to submit all of the necessary applications to amend the current permit and obtain approval from the Federal Communications Commission (FCC). Fees for these applications shall be paid for by the developer.

C. Radio Path Study and Testing Requirements

1. General

a. A radio path study and field test are necessary to investigate and test the effectiveness of communications between the proposed booster station and the existing telemetry system.

b. All booster stations must have a reliable communication path to the Abingdon WTP.

c. The path study shall consist of (1) table top study in the form of a written report, (2) field study and (3) final report. The final report shall summarize the field tests and provide recommendations on the following:

i. Successful radio paths
ii. Antenna height at proposed booster station
iii. Repeater site location (if required) with repeater site antenna height and method of land acquisition and power supply. It shall be noted that all repeater sites shall be

located within (1) County road right-of-way, (2) Harford County Government property, or (3) property to be dedicated to Harford County in fee-simple.

iv. Antenna and mast preliminary design.

d. The radio path study and field testing shall be performed by a qualified sub-consultant to the Engineer that has experience using similar radio systems. If the sub-consultant has never previously performed a radio path study for the Division of Water and Sewer, the Engineer shall first submit the qualifications of the subconsultant for review and approval prior to commencing the work. All communications concerning the radio path study and testing shall be between the Engineer and County Project Coordinator.

2. Desktop Study

a. The desktop study consists of a preliminary analysis of the geography, terrain and foliage along potential radio paths selected by the Consultant.

b. The analysis shall include a topographic map that indicates the proposed booster station site, repeater sites and the Abingdon WTP. It is highly recommended the sub-consultant utilize the latest Harford County's GIS mapping which is typically on-hand with several local engineers or is available for purchase directly through Harford County. The mapping shall also include woodlands, structures or any other feature that could interfere with the radio transmission.

c. The sub-consultant shall provide ground profiles between the proposed site and proposed radio receiving sites, antenna heights, large structures and height of woodlands/forested areas shall be shown on the profiles. The profiles shall be drawn to a common horizontal and vertical scale.

d. The desk top study shall also include a link budget analysis for the proposed pathways. The link budget is the algebraic sum of loss factors between radios.

e. The desk top study shall provide preliminary recommendations for the antenna height at the proposed pump station and proposed repeater site(s) height and location (if necessary). The sub-consultant shall consider the effect of future foliage growth in the communication paths in the determination of the recommended antenna height. The desktop study shall be summarized in a report with exhibits and submitted to the County Project Facilitator for review and approval. Once all comments have satisfactorily been addressed by the sub-consultant, the Division of Water and Sewer will provide authorization to proceed with field testing.

3. Field Testing

a. The sub-consultant may not proceed with the field testing until the County has reviewed and approved the desk top study.

b. Field testing may not occur with the absence of leaves on the trees.

c. Field tests shall be used to confirm the path predictions from the desk top study and shall also provide information on potential interferences from other RF transmitters that may be in use in the vicinity of the radio site(s).

The sub-consultant, through the Engineer shall schedule the field testing through the County Project Facilitator a minimum of seven (7) working days in advance of the test. The County Project Coordinator shall witness the field testing.

d. The sub-consultant shall provide all equipment necessary to perform the field test.

i. Battery power supply for radio
ii. Antenna(s)
iii. Rigid telescopying mast for proposed antenna heights up to 40 feet.
iv. Hand-held GPS navigator provide the location coordinates and elevation.
v. Coaxial cable
vi. Computer laptop and software for signal analysis.

e. The sub-consultant, Engineer and Developer shall obtain the necessary permission for access onto all proposed on-site and off-site testing locations.

f. The field tests shall be conducted by an experienced field technician that is thoroughly familiar with field testing procedures.

g. The test procedure shall be in accordance with the following. Modifications may be allowed if agreed to in advance by the County. To request a variance, the Consultant must submit the proposed test modifications for review in writing to Harford County Division of Water and Sewer.

h. Test Procedure

i. Provide a sketch of each test site indicating the antenna location relative to some proposed and existing reference structures.

ii. Provide photographs of the test setup and site.

iii. Elevate the antenna to the recommended height and boot-up the radio. Allow at least five minutes for the radio to acquire other radios. If a repeater site is to be investigated as part of the field test, start the repeater site before proceeding further.

iv. Using the computer software check and record the connectivity statistics and the names of all of the radios to which the test radio has connected.

v. Query the local radio for its connectivity statistics using the computer software. Save the results to a file.

vi. Repeat the above procedures for each potential repeater site.

5. Final Report

a. Upon completion of successful field testing, the sub-consultant shall prepare a written final report. The Engineer shall submit the final report to the County Project Coordinator for review and approval.

b. The report shall include a site map of each test site indicating the antenna location, antenna height, photographs of the field test set-up and a map of the region studied. If a repeater site(s) is proposed, the report shall include specific information on the repeater site location including:

   i. Tax map, Parcel no.
   ii. Property owner name and address
   iii. Map of the property boundary with the antenna location designated. The map shall include other topographic information including contours, roads/drives, structures, trees, fences, streams/ditches and ponds.
   iv. A site plan shall be presented to show the limits of property that is proposed to be acquired to locate the antenna.
   v. A description on how the property is to be acquired.
   vi. Proposed routing of electrical power supply.

c. The report shall summarize the field test procedures and include printouts of all of the data and graphics from the radio diagnostic software.

d. The report shall address potential sources of interference that may have been detected during the course of the field tests. Corrective measures shall be proposed to mitigate any potential interferences.

e. The final report shall also include the following:

   i. Proposed type of antenna cable
   ii. Proposed mast material and type
   iii. Preliminary design of mast
   iv. Recommendations on type of lightning protection and grounding.

   The determination of the above information may require assistance from the Engineer.

D. Painting, Coating and Tagging

With the exception of the hydropneumatic tanks, all exposed ferrous metal piping, pump equipment and appurtenances shall be painted regardless of factory paint finishes. These items include but are not limited to all piping, valves, pumps, motors, grating, catwalks and stairs. Ferrous surfaces shall be hand-tooled to a SP#2 cleanliness removing all loose rust, scale and peeling paint. A degreaser shall be applied to remove all grease and oily film. The surfaces shall be coated with 5-7 mills of an epoxy mastic (epoxy/polyamine) paint. The following coloring scheme shall apply:

Item	Color
Pumps	Safety Blue
Motors	Gray
Valve Handwheels	Safety Red
Valves and Suction/Discharge Piping	Safety Blue
Non-Potable Water	Green
Hydrants	Safety Yellow

The coating for hydropneumatic tanks is presented in Section 7.10B.

All interior valves shall be tagged.

Electrical conduits carrying low-voltage cable shall be labeled “low voltage” (ie. 120V and 4-20 ma) and conduits carrying high voltage cable shall be labeled “high voltage” (ie. 480 V).

E. Shop Drawing Submittal

The shop drawing submittal, review and approval process shall follow the latest version of the “Developer Built Booster Station S.O.P. Construction Phase Approval Process”.

At a minimum, the following shop drawings shall be submitted for review and approval:

1. Pumps and motors
2. Certified pump curves
3. Pre-cast and cast-in-place concrete structures
4. Hydropneumatic tank
5. Valves
6. Air compressor and appurtenances
7. Receiving tank
8. Flow meter
9. Chart recorder
10. Pressure gauges
11. Generator
12. Motor controls
13. VFD

14. Automatic transfer switches
15. PLCs
16. Electrical panels
17. Telemetry RTU
18. Telemetry antenna
19. Telemetry mast
20. Lights
21. Junction boxes
22. Unit heater
23. Motor operated dampers

F. Operation and Maintenance Manual

Prior to start-up and testing of any system or equipment, the Contractor shall submit a draft O & M Manual. For developer projects, the contractor shall submit the draft O & M Manual to the Engineer. Once the Engineer is satisfied with the contents and completeness of the manual, the Engineer shall submit the manual to the County Project Coordinator. The remaining process is outlined in the "Developer Built Pumping Station S.O.P. Construction Phase Approval Process". For capital projects, the O & M Manual shall be submitted per the Engineer's scope of services and construction specifications. Four copies of the final O&M Manual shall be submitted.

For developer projects, the Engineer shall specify that the Contractor instruct the Division of Water and Sewer personnel in the maintenance of equipment and in the operation of equipment and systems.

The O & M Manual shall be in the form of an instruction manual in one or more commercial quality 3-ring binders with durable and cleanable plastic covers. A title sheet shall be placed beneath a see-through plastic sleeve on the cover with the printed title "Operation and Maintenance Manual" and the project title and contract number. Manufacturer's printed data or text shall be neatly typed on 8 ½ x 11 inch paper. Drawings shall be folded as required and provided with a reinforced punched binder tab. A flyleaf shall be inserted between each separate product or equipment.

The manual shall contain a typewritten table of contents for each volume. Each volume shall contain the following information which pertains to the information presented in each volume. Name of Contractor, Name of responsible principal with Contractor, Contractor address and telephone number, listing of all maintenance contractors, listing of local suppliers of each part for repair or replacement, each product shall be identified by name as identified in the plans and specifications.

Only those sheets which are pertinent to the specific product shall be included. Each sheet shall be noted to clearly identify the specific product or part.

The information shall be supplemented with drawings as necessary to clearly illustrate relations of component parts of equipment and systems and control and flow diagrams.

Written text shall be provided to supplement product data. All applicable equipment certifications shall be included in the O & M Manual, including but not limited to, generator load test, backflow certification, flow meter/chart recorder calibration, and pressure gauges.

If the record plat has been recorded at the time of O&M Manual submission, a copy of the record plat shall be included in the O&M Manual.

G. As-Built Drawings

The Engineer shall submit as-built drawings for review and approval, prior to the execution of the Operational Certificate. The as-built drawing process shall be in accordance with Chapter 1, Section 1.13.

H. Spare Parts

The Engineer shall specify the following spare parts be provided with the construction contract on water booster stations: internal assembly of pumps, and telemetry manufacturer's recommendations on spare parts.

CHAPTER 8

LOW PRESSURE SEWER DESIGN

CHAPTER 8
LOW PRESSURE SEWER DESIGN

Page No.

8.1 General **25-203**
A. Responsibility of the Engineer 25-203
B. Policy 25-203
C. Abbreviations 25-204
D. Definitions 25-204

8.2 Design Criteria **25-205**
A. Pre-Design Meeting 25-205
B. Wastewater Flow Calculations 25-205

8.3 Low Pressure Sewer Design **25-206**
A. Hydraulic Calculations 25-206
B. Pipeline Design 25-206
C. Grinder Pump Design 25-207
D. Additional Information to be Included on the Construction Drawings 25-208
E. Record Plats 25-209
F. Shop Drawings 25-209
G. Pump Core Purchase Affidavit 25-210
H. Post-Construction Procedures for Developer Projects 25-210

CHAPTER 8
LOW PRESSURE SEWER DESIGN

8.1 General

A. Responsibility of the Engineer

This chapter addresses the selection and use of design criteria and practices applicable to the design of low pressure sewer system (LPSS) projects in Harford County. The subject matter discussed includes the circumstances in which the Division of Water and Sewer will consider LPSS systems, the layout of piping systems, the selection and employment of pipeline materials and the use of appurtenances. While the requirements described for the various aspects of design will include and cover the majority of conditions encountered, there is no intention to relieve the Engineer of responsibility to recognize when conditions are not favorable for the application of standards. In the preparation of the contract documents, the Engineer shall take into account such matters as environmental impact, maintenance of pedestrian and vehicular traffic, maintenance of existing and proposed utility services, constructability, system maintenance and shall produce the overall most cost-effective design.

B. Policy

1. It is the policy of the Division of Water and Sewer to promote the use of gravity sewer systems to the extent practical and feasible due to the reliability and low maintenance associated with gravity sewer systems. LPSS systems will not be considered as a method of providing sewer service that could otherwise be furnished by conventional gravity sewer systems.

2. LPSS systems shall not be used on an interim basis in anticipation of conventional gravity sewer being installed in the future.

3. If a developer or his Engineer wishes to utilize a LPSS system, a formal request shall be made in writing to the Deputy Director. Along with the request, the Engineer shall submit an Engineering Evaluation which proves the low pressure system is more economical to Harford County Division of Water and Sewer than a conventional gravity sewer system. A 30-year present worth cost analysis shall be performed in comparing the costs of the two systems. Harford County routine maintenance costs including pump core and rotor repair and replacement, basin cleaning, force main flushing, and homeowner electric costs shall be included in the present worth costs. The Division of Water and Sewer shall review and approve the 30-year cost analysis. LPSS systems may be considered if: (1) the present worth cost of the LPSS system is less than the conventional sewer system and (2) the site location does not require the extension of conventional gravity sewer beyond the subdivision (ie. The property is at the edge of the development envelope or drainage basin). Environmental constraints and topographical conditions may also be considered in the above evaluation.

4. For developer projects, in residentially-zoned property, Harford County will not consider LPSS systems for those portions of a subdivision other than detached single family homes with sufficient room for installation of the basin. Harford County will own and maintain the sewage grinder pumps. The property owners will be responsible for the electrical costs to operate the pumps.

5. For business or commercially-zoned properties, the grinder pumps will be owned and maintained by the property owner. The limit of Harford County maintenance will end at the service valve assembly. The types of pumps utilized by the property owner shall be those which the Engineer specified in the design of the LPSS system.

6. The Division of Water and Sewer has standardized on the Environment-One grinder pump, pump basin, and control panel. The Division of Water and Sewer will only consider other semi-positive displacement grinder pumps if the Division of Water and Sewer determines the experience and technical qualifications of the pump manufacturer and local representative are equal to that of the Environment-One product, installation, warranty and maintenance services. All components including the basin, lid, pump core, seating assembly, internal piping, anti-siphon/check valve assembly, electrical components, control system and control panel shall be manufactured by the grinder pump manufacturer.

C. Abbreviations

For standard abbreviations, see Section 1.2, “Abbreviations” of these design guidelines.

D. Definitions

Low Pressure Sewer System: Low pressure sewer systems are defined as sewer collection systems which contain more than one semi-positive displacement pump which pump into a common force main header.

Ejector Pump: A privately owned and maintained pump which pumps sewage from a dwelling to a publicly-owned gravity sewer cleanout.

Service Valve Assembly: A series of valves and appurtenances connected to the pump discharge, which allow Harford County to flush the service connection.

In-line Flushing Connection: A series of valves and appurtenances connected to the low pressure sewer which allow Harford County to flush the low pressure sewers in multiple directions.

Terminal Flushing Connection: A series of valves and appurtenances connected to the terminal end of the low pressure sewer (which is not planned to be extended) which allow Harford County to flush the low pressure sewer.

Simplex Pump: A semi-positive displacement sewage grinder pump with one pump core designed to serve one single family home. The pump will be powered with the electricity at the house.

Duplex Pump: A semi-positive displacement sewage grinder pump with two pump cores designed to serve two single family homes. Each pump core will be powered by the electricity at each respective house.

Control Panel – Electronic pump controls housed within a weatherproof housing, supplied by the pump manufacturer, mounted on the side of every single family house within sight of the grinder pump.

8.2 Design Criteria

A. Pre-Design Meeting

Although it is not required, it is encouraged that prior to commencing any work, the Engineer schedule a pre-design meeting with the Division of Water and Sewer, or other appropriate agency, to discuss any topics that are particularly important in the design of the project. Pertinent topics may include any of the following:

1. Preliminary or prior engineering evaluations, if applicable
2. Development of population projections and wastewater flows
3. Sizing of major system components
4. Limit of project and future extension, if planned
5. Route selection and location of the pipe in the public right-of-way
6. Pipe materials and appurtenances
7. Design criteria to be used
8. Both design constraints due to and anticipated interaction with existing utilities
9. Directional drilling versus open-cut
10. Special topographic conditions affecting design such as slopes, streams, and floodplains
11. Special permitting issues created by the presence of wetlands, rare and endangered species, critical areas, historical and/or archaeological artifacts
12. Easement requirements
13. Conditions affecting traffic maintenance and control

B. Wastewater Flow Calculations

Wastewater flow calculations shall conform to Section 4.2.C.

8.3 Low Pressure Sewer Design

The Engineer shall become familiar with the Standard Specifications and Details related to Low Pressure Sewer Systems.

A. Hydraulic Calculations

1. The LPSS system shall be designed in strict accordance with the Environment One design guidelines. The sizing of low pressure sewers shall be based on the pump manufacturer's tables showing the probability of pumps running at one time. The Hazen-Williams friction coefficient (C-factor) for all piping designs shall be 140.

2. Environment One provides, at no charge, the "Low Pressure Sewer System Design Assistant" which is a computer program on CD-ROM used to design LPSS systems. All input data in the program shall match that shown on the construction drawings. At the time of the first submittal of construction drawings, the Engineer shall submit the following:

    a. Node map or sketch which corresponds to both the LPSS system shown on the construction drawings and data input into the computer program. The node map shall identify pipe and node number and grinder pump locations.

    b. All data output tables of the computer program.

3. The minimum velocity based on the design flow shall be 2.0 feet per second for scouring purposes.

4. All service lines between the grinder basin and LPSS shall be 1 ¼" for residentially-zoned property.

B. Pipeline Design

1. The design of the LPSS system must be based upon the specific type of sewage grinder pump allowed. The construction drawings shall specifically state which pump brand model number(s) the design was based. Centrifugal pumps will not be considered for LPSS applications due to their difficulty with pumping against a wide range of head conditions encountered with LPSS systems. The semi-positive displacement pump is best suited for LPSS application and will be the only type of pump allowed.

2. The profile of the LPSS pipelines shall be constantly rising towards the manhole which the LPSS system discharges. If a constantly rising profile cannot be achieved, a sewage air release valve shall be designed at the high point(s) on the pipeline.

3. When an alignment is planned parallel to a water main, the location of the LPSS piping shall be a minimum of ten (10) feet from the water main. When an alignment is planned parallel to a gravity sewer, the location of the LPSS piping shall be a minimum of five (5) feet from the gravity sewer. Other design aspects of the location of the LPSS piping shall generally conform to the sewer main design in Chapter 4 and force main design in Chapter 6.

4. A service valve assembly shall be located between the main and the grinder pump as shown on the Standard Details.

5. In-line flushing connections shall be placed a minimum of every 400 feet and at all tees for branches. The in-line flushing connection shall allow for the flushing of the main in a forward or backward direction. The configuration of the in-line flushing connections shall be in accordance with the Standard Details.

6. Terminal flushing connections shall be placed at the end of all pipeline dead ends and shall be in accordance with the Standard Details.

7. Pipeline materials for LPSS systems shall be HDPE, SDR 11, in accordance with ASTM F714. The Standard Specifications detail the requirements of the pipe material, fittings, and appurtenances.

C. Grinder Pump Design

For developer projects, the utility contractor will install the LPSS pipeline and appurtenances, the grinder pump basin, service valve assembly and associated service discharge and the gravity SHC. The pump cores, control panel and control/power cable and wrenches shall be pre-purchased by the developer or developer's contractor and shall be within the pump suppliers' inventory. As each home is built, it will be the responsibility of the homebuilder to connect the SHC, the electric/power cable, control panel, breaker, and to install the pump core as part of the use and occupancy approval process.

For capital projects, the utility contractor will install the LPSS pipeline and appurtenances, the grinder pump basin, service valve assembly and associated service discharge, and the gravity SHC. For vacant properties, the pump cores, control panel and control/power cable shall be pre-purchased by the utility contractor and stored with the pump supplier. For developed properties, the utility contractor shall install the power/control cabling, control panel and breaker. All pump cores shall be within the pump supplier's inventory until the time the property owner requests a residential service application.

1. The Engineer shall design the grinder pumps and SHC layout in accordance with the Standard Details.

2. The grinder pump, service valve assembly, and SHC shall be placed in a drainage and utility easement, as shown in the Standard Details, in the front corner of the lot, immediately adjacent to the road right-of-way.

3. The maximum depth of the SHC at the grinder pump is 12-feet. This depth will dictate the maximum depth of the basin for the grinder pump. If it is not possible to achieve a gravity SHC between the home and cleanout, it will be the responsibility of the property owner to install an ejector pump to convey the sewage to the grinder pump.

4. Duplex grinder pumps shall be used as much as possible. For duplex installations, the grinder pump shall be located on the lot line dividing two properties within a drainage and utility easement, equally split between the two lots.

5. Simplex grinder pumps will only be allowed if (1) the lot size would result in a duplex unit with an electrical connection exceeding 200 feet between the house and grinder pump, (2) the number of lots on the side of the road are not even, or (3) if otherwise approved by the Division of Water and Sewer.

6. In no case shall the electrical service between the house and grinder pump exceed 200 feet. If this distance cannot be met, then a thicker gauge electrical/power control cable will be required.

7. If a grinder pump is proposed to be located within the 100-year floodplain, the Engineer shall add a note to construction drawings identifying the specific grinder pumps within the 100-year floodplain and that they shall be equipped with a flood-vent utilizing Goretex membrane, in accordance with Standard Detail LP-18 and LP-19.

   The circuit breaker and control panel shall be mounted on the home a minimum of one foot above the 100-year floodplain. The circuit breaker and control panel shall be fully accessible and may require the construction of a platform and stairs. If a plat form is required, the plat form and stairs shall have a hand-railing. The height from the deck of the plat form to the center of the breaker and control panel shall be 5 feet.

8. The grinder pump shall be designed so that the distance between the top of basin is a minimum six (6) inches above the proposed or existing sidewalk elevation. If sidewalks do not exist or are not planned, the top of grinder basins shall be a minimum 6-inches above finished grade. Note: Finished grade includes the installation of sod. The Engineer shall note on the construction drawings that the grinder pumps shall be purchased with a 2-year warranty, beginning on the date of successful startup by the pump manufacturer.

D. Additional Information to be Included on the Construction Drawings

1. Each LPSS system shall include the purchase and delivery of spare pump cores to the Division of Water and Sewer, Sod Run Maintenance Supervisor. The Engineer shall include this requirement in a special note on the construction drawings.

The number of spare cores shall be as follows:

Number of Grinder Pump Cores Proposed	Number of Required Spare Cores
2 – 20 units	1 core
21 – 50 units	2 cores
51 – 150 units	5 cores

2. The Engineer shall include all applicable Standard Details on the construction drawings.

3. A special note shall be added to the contract drawings which requires the contractor to purchase 5 padlocks for each duplex grinder pump and 3 padlocks for each simplex grinder pump. Padlocks are for the basin lid, control panel, and breaker. Pad locks shall be delivered to the Sod Run Maintenance Supervisor prior to the operational walkthrough. Padlocks shall be Master Lock No. 3 with weather protective coating Harford County keyed (0464).

4. A special note shall be added to the construction drawings that the contractor must submit shop drawings to the Engineer for review and approval in accordance with Section 11307 of the Standard Specifications. The Engineer shall then forward his approved shop drawings to the Division of Water and Sewer for review and approval. All shop drawings shall receive the approval of the Division of Water and Sewer prior to holding a pre-construction meeting.

5. The Engineer shall include in the service chart, the top and bottom elevation of the grinder pump basin, and invert elevations of the incoming sewer service and associated cleanouts and discharge pipeline finished grade.

E. Record Plats

For developer projects, the record plat for the subdivision shall clearly identify all lots that will be served with a publicly owned grinder pump and shall note that these lots will be served by a LPSS system. The note shall state: “Lot Numbers _ _____ to ___ will receive sewer service by means of a Harford County owned and maintained sewage grinder pump. Harford County shall have access to all ancillary equipment and systems associated with the sewage grinder pump.”

F. Shop Drawings

In accordance with the Standard Specifications, shop drawings shall be furnished by the contractor for review and approval by the Engineer with subsequent review and approval by the Division of Water and Sewer. The required shop drawings include the following: sewage grinder pump units including pump basin, accessway, pumps and motors, check valves, controls and wiring. All shop drawings shall receive the approval of the Division of Water and Sewer prior to holding a pre-construction meeting.

G. Pump Core Purchase Affidavit

For developer and capital projects, prior to operational approval, an affidavit from the pump supplier shall be submitted to the Division of Water and Sewer which states that the required quantity of grinder pump cores, electrical cable, and control panels were pre-purchased and will be made available at the local pump suppliers warehouse until such time as the house connections are made. Additionally, copies of all invoices must be submitted along with the affidavit.

H. Post-Construction Procedures for Developer Projects

For Developer projects, the following procedures have been established on installing the plumbing and electrical connections to the grinder pumps as well as start-up and testing. These procedures are primarily aimed at the homebuilder:

1. The grinder pump basin and cleanouts shall be protected from damage during the construction of the home(s). Protection shall at a minimum consist of 4 foot high orange safety fence installed a minimum of 5 feet beyond the grinder pump basin and cleanouts. These facilities have been inspected and approved as part of the operational process. Any damage to these facilities from the homebuilder or his subcontractors shall be repaired or replaced if necessary by a Harford County approved licensed utility contractor at the homebuilder's expense.

2. Under an electrical permit, the homebuilder shall have a licensed electrician install the electrical service and control panel in conformance with the standard details. Homebuilder is responsible for acquiring the control panel, controls, alarm system and control/power cable from the pump supplier. For duplex grinder pumps, each house will have electrical power and controls that only operate the pump for that house.

3. Under a plumbing connection permit, the homebuilder shall have a licensed plumber install the sewer service between the house and existing cleanout.

4. The ground around the grinder basin must be graded to the finished grades for inspection at start-up. The start-up test will be cancelled if the ground is not properly graded. At no times shall the grinder pump basin be within a sump area. The site drainage shall freely drain stormwater away from the grinder basin. If this cannot be achieved, the homebuilder shall contact the pump supplier to have an extension piece installed by the pump supplier, at the homebuilder's cost. There must be a minimum of 6-inches from the top of the grinder basin lid and finished grade (including sod). If the 6-inch clearance cannot be met the homebuilder shall have the pump manufacturer install a riser section, at the homeowner's cost.

5. Once the electrical and plumbing work is complete, the homebuilder shall schedule for a pump start-up with a <u>minimum</u> 1 week advance notice. Notification shall be to the pump supplier with (1) the test date and time,

(2) property address and (3) homebuilder contact name and phone number. The same notification shall also be to Harford County Water and Sewer Pump Station Operations Maintenance Superintendent.

6. Just prior to the start-up test, the homebuilder shall have a septic hauler with vacuum capabilities on-site to thoroughly clean all stones and debris from the bottom of the pump basin.

7. At the day of the start-up, water must be available by the homebuilder to fill the basin, as needed, to test the pump.

8. The following people must be present at the start-up test: Homebuilder, homebuilder's electrician, pump supplier technician, and Harford County Operations Maintenance Superintendent.

9. The pump supplier technician will then test all of the electrical connections and inspect the installation. If all is acceptable to the pump supplier and Harford County, the pump supplier technician will install the pump core and check its operation. If all operations are successful the pump may be put into service.

10. Upon satisfactory start-up the grinder pump, the homebuilder shall provide a copy of the attached grinder pump information to the new homeowner at settlement or sooner. (See Appendix)

CHAPTER 8
APPENDIX

- Letter to Homeowner (Emergency response and allowable wastes)

JAMES M. HARKINS
HARFORD COUNTY EXECUTIVE

JOHN J. O'NEILL, JR.
DIRECTOR OF ADMINISTRATION

JERALD R. WHEELER, P.E.
DIRECTOR OF PUBLIC WORKS

JOEL V. CAUDILL, P.E.
DEPUTY DIRECTOR OF PUBLIC WORKS

HARFORD COUNTY GOVERNMENT

DEPARTMENT OF PUBLIC WORKS
DIVISION OF WATER AND SEWER
SEWAGE GRINDER PUMP

April 23, 2004

Dear Property Owner:

As you may know, your home receives public sewer service through use of a sewage grinder pump, located underground in the front of your house near the street. The purpose of this letter is to provide you with the information necessary for the proper operation of the system and to explain what to do in case of an emergency.

Although you are responsible for the nominal cost of electricity to run the pump, you do not have to maintain it. The Harford County, Division of Water and Sewer owns and maintains the sewage grinder pump. It is located within a permanent drainage and utility easement located on your property. From time to time, the Water and Sewer Maintenance personnel must access the pumps by opening the large round plastic dome. Therefore, please refrain from planting trees and shrubs within ten (10) feet from this dome.

The pumping system is powered by electricity from your home. A separate circuit breaker and control panel is mounted on the side of your house which controls the operation of the pump. Both panels are locked for access only to Water and Sewer personnel. In case of a malfunction, the red light on the control panel will turn on and an alarm will sound. When this alarm sounds, there is a potential for a sewage back-up into your home so it is recommended you immediately try to cease water use in your home.

IF THE ALARM SOUNDS, PLEASE CALL 410-612-1612 (available 24 hours per day). A MECHANIC WILL BE DISPATCHED TO INVESTIGATE THE MALFUNCTION. PRIOR TO THE ARRIVAL OF A MECHANIC, PLEASE LIMIT YOUR USE OF WATER TO PREVENT A SEWAGE BACK-UP. NORMALLY, A MECHANIC SHOULD BE ABLE TO ARRIVE AT YOUR HOME WITHIN AN HOUR.

The sewage grinder pump cannot operate without electrical power. Therefore, in case of a power outage, please refrain from using water to prevent a sewage back-up until BG&E restores the power in your home or neighborhood.

Although the sewage grinder pump is capable of accepting and pumping a wide range of materials, the following materials should not be introduced through any sewer, either directly or through a kitchen waste disposal unit:

- Grease
- Glass
- Metal
- Seafood shells
- Stone
- Lubricating oil/grease
- Gasoline
- Diapers, rags or cloth
- Plastic objects
- Kitty litter
- Explosives
- Flammable material
- Strong chemicals (i.e., chemicals with hazardous warning labels such as pesticides and herbicides.)

If you have any questions on the operation of the unit, or for further information on our pump maintenance program, please contact Mr. James Hynes at (410) 273-5617 week days between 7 am and 3 pm.

Sincerely,

Joel V. Caudill, P.E.
Deputy Director of Water and Sewer

TCH:RBC/kmd/tmr

Preserving our values protecting our future

MY DIRECT PHONE NUMBER IS 410-638-3300

CHAPTER 9

DESIGN GUIDELINES AND PROCEDURES FOR SOUTHWEST FACILITIES

CHAPTER 9
DESIGN GUIDELINES AND PROCEDURES FOR SOUTHWEST FACILITIES

		Page No.
9.1	**Engineered Drawings**	**25-213**
	A. Purpose	25-213
	B. Plan Requirements	25-213
	C. Profile Requirements	25-214
9.2	**Shop Drawings**	**25-214**
9.3	**Drainage and Utility Easement**	**25-215**
9.4	**Design**	**25-215**
	A. Sewer House Connection	25-215
	B. Septic Tanks	25-216
	C. Sewage Effluent Pumps	25-216
	D. Electrical Facilities	25-217
	E. Landscaping	25-217
9.5	**Special Provisions**	**25-217**
9.6	**Inspections**	**25-217**

CHAPTER 9
DESIGN GUIDELINES AND PROCEDURES FOR SOUTHWEST FACILITIES

Property owners which connect to public sewer within the Southwest Facilities Sewer Petition Areas (Dembytown/Hanson Road, Forest Greens, Bush Road, Swan Creek, Red Maple Drive, and Clearview) must adhere to the following design guidelines as well as all other applicable sections of the Design Guidelines and Standard Specifications.

9.1 Engineered Drawings

A. Purpose

Engineered drawings shall be prepared in order to present the layout of the proposed sewage system on the property relative to the proposed or existing home, property lines, and topographic features. These plans will be reviewed and approved by the Division of Water and Sewer to ensure they are consistent with the existing innovative and alternative sewer system and subsequently be used to ensure the constructed facilities are consistent with the engineered drawings. The engineered drawings must contain a plan and profile, drawn to scale as shown in the sample plan and profile shown in the Chapter 9 Appendix. The information shown shall be consistent with the Design Guidelines, the Southwest Facilities Specifications, and the Harford County Plumbing and Electrical Codes.

B. Plan Requirements

1. Property owner name, address, and telephone number
2. Date drawing prepared or revised
3. Scale shall be 1” = 30’
4. Property lines and building setback lines
5. Existing or proposed home and other structures
6. Topographic features such as driveways, trees, etc.
7. Ground elevations at two foot contour intervals
8. Location of any existing and proposed drainage and utility easements
9. Location of any existing and proposed water, sewer, gas, electric, and cable utilities. Water and sewer utilities shown shall include sewer house connection, septic tank, sewage effluent pump (if required), cleanouts, service valve assembly (if required), pump control panel (if required), private sewage ejector (if required), home electrical service, electrical service from sewage effluent pump to home (if required) and curb stop or water meter.
10. Construction notes for special conditions including tie-in procedures, etc.

C. Profile Requirements

1. Property owner name, address, and telephone number
2. Date drawing prepared or revised.
3. Scale shall be 1” = 30’ horizontal and 1” = 5’ vertical
4. Ground elevation over sewer house connection between existing sewer to house.
5. Location and elevation of any existing and proposed utilities.
6. First floor and basement elevations of house.
7. Critical elevations of:

    a. Plumbing exit at house
    b. Bottom of cleanout prior to septic tank
    c. Top of septic tank
    d. Bottom of sewage effluent pump basin
    e. Vertical clearance between proposed sewer house connection and existing utilities which it crosses.
    f. Tie-in for gravity systems.

9.2 Shop Drawings

A. The property owner shall submit shop drawings to the Division of Water and Sewer for review and approval. The property owner shall not order any equipment until all shop drawings have been approved. The property owner shall take into consideration the timeframe required to obtain shop drawings from the manufacturer and the 1 to 2 week review time from the County in their overall construction schedule.

B. Shop drawings shall include:

1. Septic Tank
2. Pump Basin
3. Pump
4. Floats for level control
5. Electrical Junction Box
6. Gravity and pressure piping
7. Shut-off valve
8. Check Valve
9. Pipe disconnect
10. Service Valve Assembly
11. Wiring
12. Pump control panel

The County shall reject any equipment which is installed without prior shop drawing approval.

9.3 Drainage and Utility Easement

A drainage and utility easement plat and deed of easement shall be prepared to encompass the proposed County-owned sewer facilities within a 20 feet wide by 25 feet long easement area. The septic tank, cleanouts, service valve assembly, and sewage effluent pump must be located within the easement. The easement must be located immediately adjacent to the road right-of-way. County-owned pipelines shall be located within a 15-foot wide drainage and utility easement. If the property was previously recorded on a record plat, the record plat shall be revised to include the above easement areas. The drainage and utility easement plat and revised record plats shall be prepared and sealed by a surveyor or professional engineer licensed in the State of Maryland. The plat shall be prepared in accordance with Harford County standards, and be subject to the review and approval of Harford County. A deed of easement, prepared by an attorney, shall accompany all individual plats. Upon review and approval of the plat and deed, these documents shall be signed by the respective property owner and recorded in the County courthouse. Equipment may not be installed, nor a Use and Occupancy Permit may not be approved until the above easements have been recorded in the in the Courthouse.

9.4 Design

A. Sewer House Connection

1. Sewer house connections shall extend from the existing sewer main to the property line or edge of easement. Depending on the sewer petition area, and type of existing sewer system, the sewer house connection may either convey sewage into the main line by either a gravity sewer or by a pump and force main. Both type of systems require the use of a septic tank and a cleanout prior to the septic tank at the edge of easement. Gravity systems also require the use of a double cleanout between the septic tank and the sewer main, at the edge of property line. Pumped systems require the use of a sewage effluent pump and basin as well as a service valve assembly between the pump basin and the sewer main, at the edge of property line.

2. Neighboring properties must remain in-service while the sewer main is tapped. Therefore time-of-day restrictions on tapping the existing sewer main may be required.

3. All materials must be in accordance with the Southwest Facilities specifications, approved shop drawings and/or approved list of materials.

4. Pipelines shall have a minimum 42-inch bury depth and connect to the sewer main without a drop connection.

5. Gravity sewers shall be laid at a minimum 2% slope.

6. Force mains shall be laid level or have a positive slope so air does not become trapped at high points.

B. Septic Tanks

1. Locations – Septic tanks must be accessible for County maintenance from the street. Tanks must be located within the proposed easement area. Tanks shall be no closer than 10 feet from driveways or traveled areas.

2. Materials – All materials shall be in accordance with the Southwest Facilities specifications, approved shop drawings and/or approved list of materials in Part 27.

3. Bury Depth – The bury depth for concrete septic tanks shall be a minimum of 18-inches and a maximum of 6 feet from the top of the tank to the ground surface.

4. Appurtenances – The riser shall be one piece, sized per the Southwest Facilities specifications, and contain a waterproof seal between the riser and the tank. The top of the riser shall extend 2 to 3 inches above final grade. Final grading shall slope away from the riser and shall not allow the ponding of water near the riser.

C. Sewage Effluent Pumps

1. A sewage effluent pump may be required as part of the sewer house connection. The sewage effluent pump will be owned and maintained by the Division of Water and Sewer. Depending on the arrangement and depth of the facilities, a privately owned ejector pump may be necessary in order to convey the sewage from the house to the County facilities.

2. The pump manufacturer, model number, and size shall be in accordance with the Southwest Facilities specifications

3. The pump accessories shall be in accordance with the Southwest Facilities specifications.

4. The pump basin shall be 60 inches deep with a concrete anti-flotation collar in accordance with the Southwest Facilities specifications.

5. The pump basin shall include a gasketted lid with bolts. Final grading around the lid shall slope away from it and prevent the ponding of water near it.

6. Private sewage ejector pumps shall be owned and maintained by the property owner. The private ejector pumps shall not adversely impact the function of the County facilities.

D. Electrical Facilities

1. Control Panel – The control panel shall be mounted on the exterior of the house within site of the basin. The distance between finished grade and the center of the control panel shall be 5 feet. The control panel shall be manufactured to match the original equipment in features and function. Both electrical components and the control panel assembly must be UL listed and feature the UL label.

   The circuit breaker and control panel shall be mounted on the home a minimum of one foot above the 100-year floodplain. The circuit breaker and control panel shall be fully accessible and may require the construction of a platform and stairs. If a plat form is required, the plat form and stairs shall have hand-rails. The height from the deck of the platform to the center of the breaker and control panel shall be 5 feet.

2. Wiring – All wiring shall comply with the Southwest Facilities specifications, all electrical codes and be subject to inspection under a Harford County electrical permit.

E. Landscaping

1. The planting of trees and shrubs shall not be any closer than 10 feet of water and sewer facilities.

9.5 Special Provisions

Any deviation in the above guidelines shall receive written permission from the Division of Water and Sewer. If, in the judgment of the Engineer, other site conditions exist which may adversely impact the location and size of the sewer facilities, Harford County has the right to require revisions.

9.6 Inspections

A. All work shall be subject to inspection, examination and testing by Harford County. The property owner and his contractor(s) shall provide for the access to observe all facets of the construction. Harford County has the right to require the property owner and contractor to uncover any work which was performed but not inspected. Harford County has the right to reject any work or materials which are not in conformance with the approved engineered drawings, approved shop drawings, permits, and Southwest Facilities specifications. Rejected workmanship or materials shall be satisfactorily replaced with proper material.

B. Any advice which the inspector may give to the property owner or contractor shall not be construed as binding the County in any way or releasing the property owner or contractor from fulfilling all of the terms of the installation and complying with the engineered drawings, approved shop drawings, and Southwest Facilities specifications. Where there is a disagreement between the property owner or contractor and the inspector, the inspector will immediately notify the Water and Sewer Engineer as to the issue of disagreement. If the property owner or contractor still refuses to make the necessary corrections, the Deputy Director will issue a written notification suspending all work and explaining the reason of the shutdown. The inspector will be asked to leave the site immediately and any work performed during the inspector's absence will not be accepted. Such negligence on behalf of the property owner or contractor will delay the overall use and occupancy acceptance.

CHAPTER 9
APPENDIX

- Southwest Facilities Engineered Drawing
  Sample Plan

- Southwest Facilities Engineered Drawing
  Sample Profile

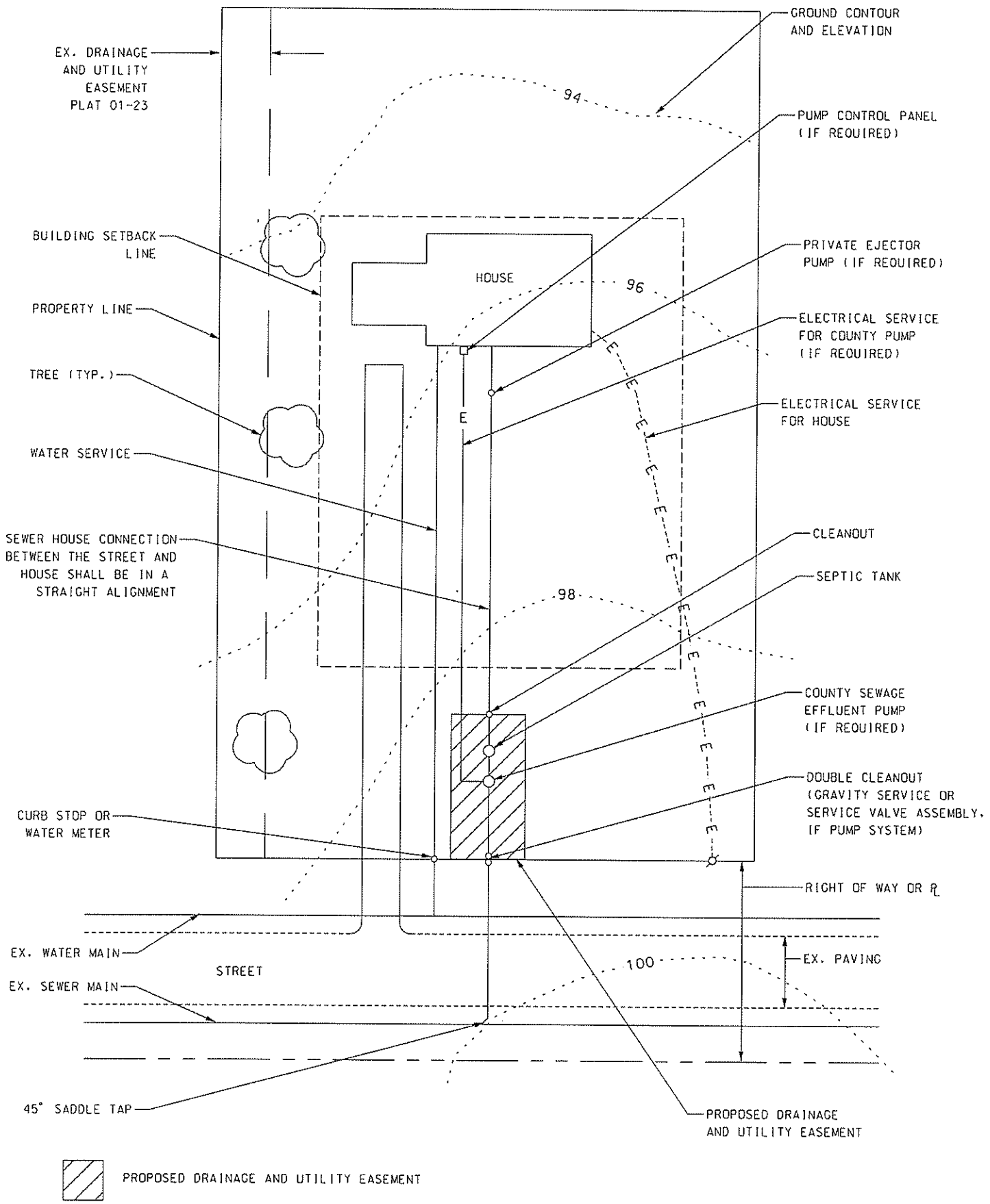

HARFORD COUNTY, MD DEPARTMENT OF PUBLIC WORKS	ENGINEERED DRAWING SAMPLE PLAN SCALE: 1" = 30"	JOHN SMITH 2910 MAIN STREET 410-555-5812

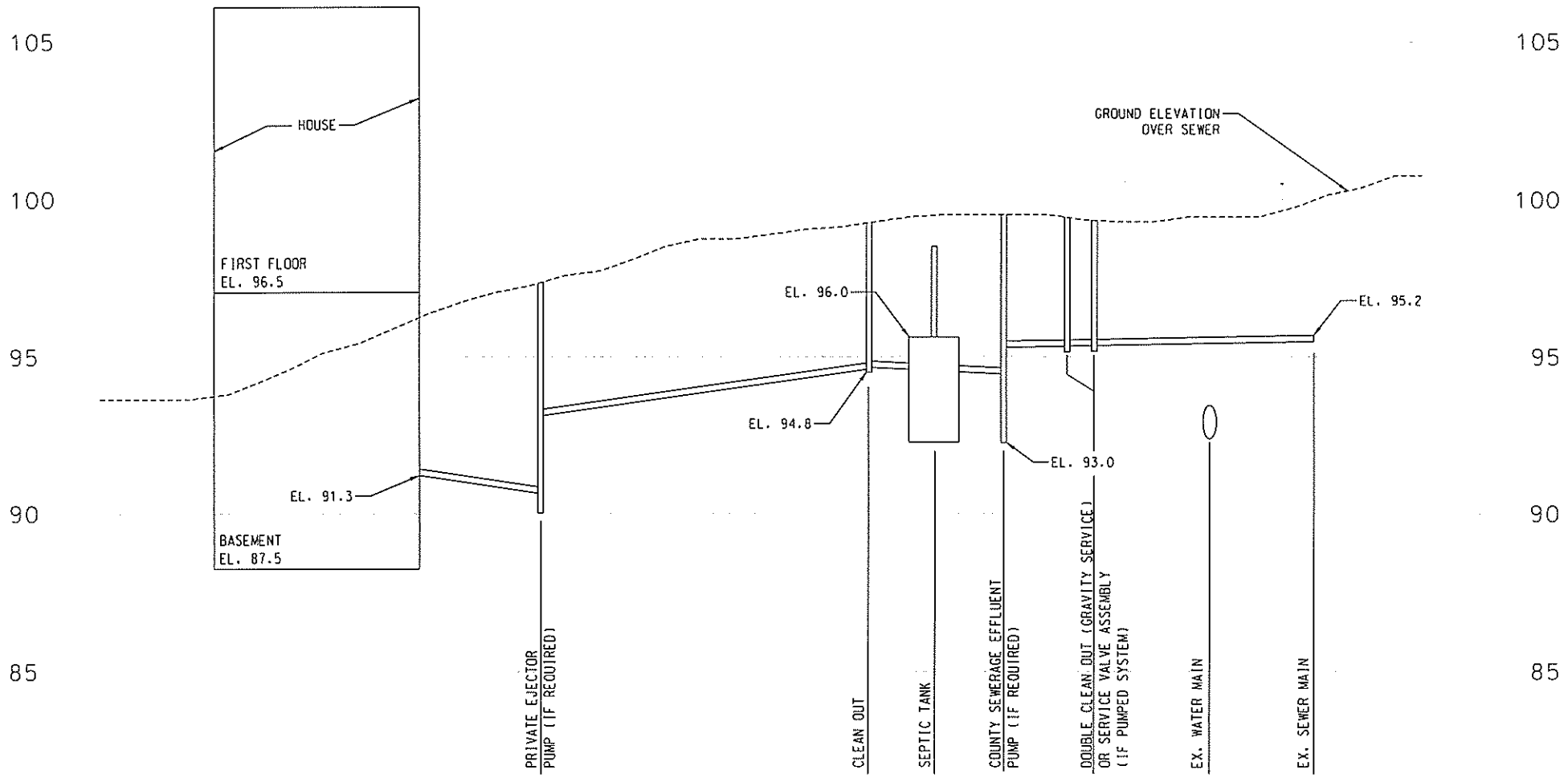

HARFORD COUNTY, MD
DEPARTMENT OF
PUBLIC WORKS

ENGINEERED DRAWING
SAMPLE PROFILE
SCALE: HORIZ: 1"=30' VERT: 1"=5'

JOHN SMITH
2910 MAIN STREET
410-555-5812