THE DESIGN/BUILD PROCESS FOR THE RETAINING WALL SHALL INCLUDE LAYOUT CALCULATIONS TO DETERMINE THE LOCATION OF THE WALL BASE, TAKING INTO ACCOUNT WALL BATTER AND HEIGHT, TO ACHIEVE THE TOP OF WALL LOCATIONS SHOWN ON THIS PLAN.

THE ORNAMENTAL ALUMINUM RAILING/FENCE RUNS ALONG WALL CAP 'A' OVERLOOK PLAZA, TURNS SOUTH ALONG WALL CAP 'A', AND ENDS AT THE BUILDING; IT CONTAINS A MAN GATE, WITH A 42" OPENING, LOCATED 2' FROM THE BUILDING FACE.

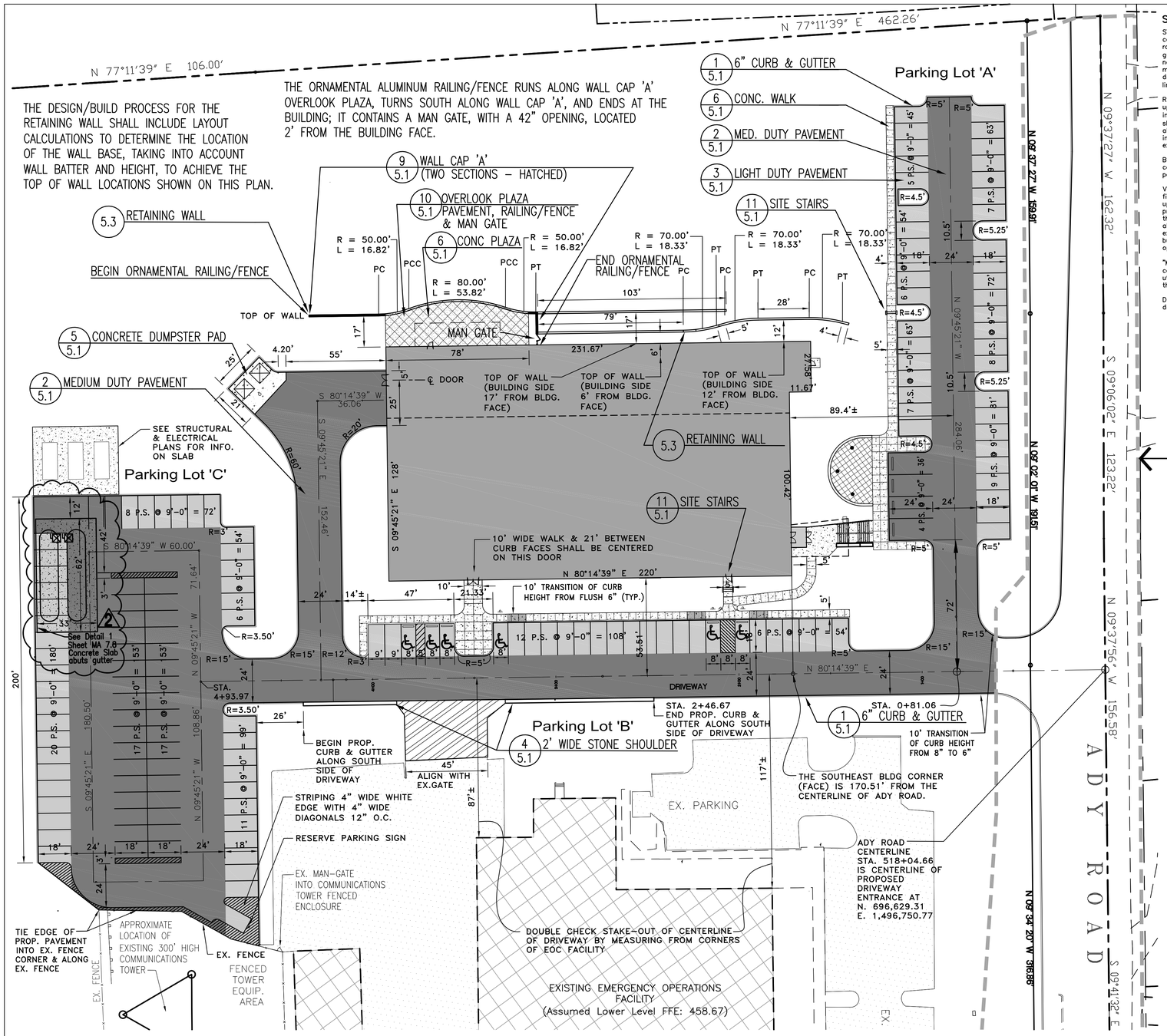


## STAKE-OUT REQUIREMENTS AND AS-BUILT SURVEYS

STAKE-OUT BY LICENSED SURVEYOR. A professional surveyor licensed in Maryland, with proven capability and experience on similar projects, shall stake-out all sediment control measures, rough grading, excavations, fills, finished grading, buildings, structures, grading, roads, curbs, guardrails, hardscapes, walks, walls, fences, athletic field markers and utilities (including but not limited to: storm drain manholes, inlets, pipes, bends, and clean-outs; sanitary sewer manholes, clean-outs, gravity pipes and bends, and force mains; septic tank locations and drain fields; wells; water meters, water mains and bends, fire hydrants; geothermal wells and lines; light poles bases; mechanical equipment; tanks; electric and telecommunications lines).

RECORD LOG AND AS-BUILT INFORMATION. Maintain a log of layout control work and an updated survey of as-built conditions showing the size, type, location and elevation of site improvements including building corners and slab elevations, utilities (including the size, type, slope, and invert elevations of pipes), curbs, parking lot and road elevations, walk and wall alignments and elevations, and the location and elevation of other site amenities and improvements. Notify Owner immediately when deviations from required lines and levels exceed allowable tolerances. **Provide a copy of the updated as-built survey each month.**

BENCHMARKS. Preserve and protect permanent benchmarks and control points during construction operations. Temporary benchmarks and control points shall not be cut into or permanently marked on site improvements or trees.

VERIFICATION OF CONDITIONS AND COMPUTATIONS. Before beginning stake-out computations, field-verify the coordinates and elevations of key boundary corners and topographic features upon which the layout of proposed improvements is based. Compute the layout of all proposed improvements in accordance with the dimensions and graphic representations on the drawings. Verify existing pavement elevations and cross slope, and compute proposed alignment and elevations for road widenings and where the proposed improvments tie into existing improvements. Before beginning site clearing, provide a preliminary stakeout of buildings, roads, parking lots, and limit-of-disturbance, and provide the Owner with the opportunity to observe the completed preliminary stake-out before proceeding with work.

"MEASURE TWICE, CUT ONCE": Throughout construction, the Contractor's superintendent shall continually check the accuracy of all stake-out, proposed excavations, grading, structures, utilities, concrete forms, string lines, and other site improvements before each component of the work begins.

DIMENSIONS. Unless otherwise noted on the drawing, all dimensions shown on the site drawings follow these conventions:
(a) dimensions to a building or retaining wall are to the face of the wall;
(b) dimensions to a curb are to the face (not the back) of the curb;
(c) dimensions to a fence are to the centerline of the fence;
(d) dimensions for sidewalks abutting a curb are from the face of curb to the back edge of the walk;
(e) dimensions for other sidewalks or open paving sections are measured to the edge of paving;
(f) dimensions to a manhole, inlet, cleanout, pipe bend, valve, fire hydrant or other utility appurtenance are to the center of the structure;
(g) dimensions for steps are to the outer edge of the staircase and the nose of the top or bottom step;
(h) layout of sediment control measures and plant material shall be scaled.

If a discrepancy is undetected prior to formation of the construction contract, numerically written dimensions shall take precedence over scaled dimensions for the purpose of the contract; the contractor shall notify Tesseract of any such discrepancy immediately upon discovery and shall wait for clarification before proceeding with construction.

See Sheet C 4.1 for layout of road and drainage improvements in and along Ady Road.

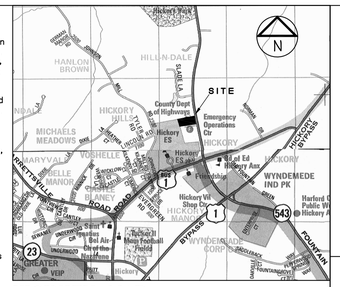


VICINITY MAP Scale: 1" = 2000'

ADC The Map People - Permitted Use # 20612205

## LAYOUT OF THE PROPOSED BUILDING AND PARKING LOTS

THE CENTERLINE OF THE PROPOSED DRIVEWAY, BEGINNING AT THE CENTERLINE OF ADY ROAD, SHALL SERVE AS THE BASE LINE FOR LAYOUT OF THE PROPOSED BUILDING AND PARKING LOTS.

THE DRIVEWAY, BUILDING, AND PARKING LOTS ARE SQUARE:
ALL "EAST-WEST" LINES ARE N 80°14'39" E.
ALL "NORTH-SOUTH" LINES ARE S 09°45'21".

BUILDING LOCATION:
THE SOUTHERN BUILDING **FACE** (NOT COLUMN LINE) IS SET 53.51' FROM THE CENTERLINE OF THE DRIVEWAY.
THE SOUTHEAST BUILDING CORNER (FACE) IS 170.51' FROM THE CENTERLINE OF ADY ROAD AS MEASURED ALONG THE CENTERLINE OF THE DRIVEWAY.

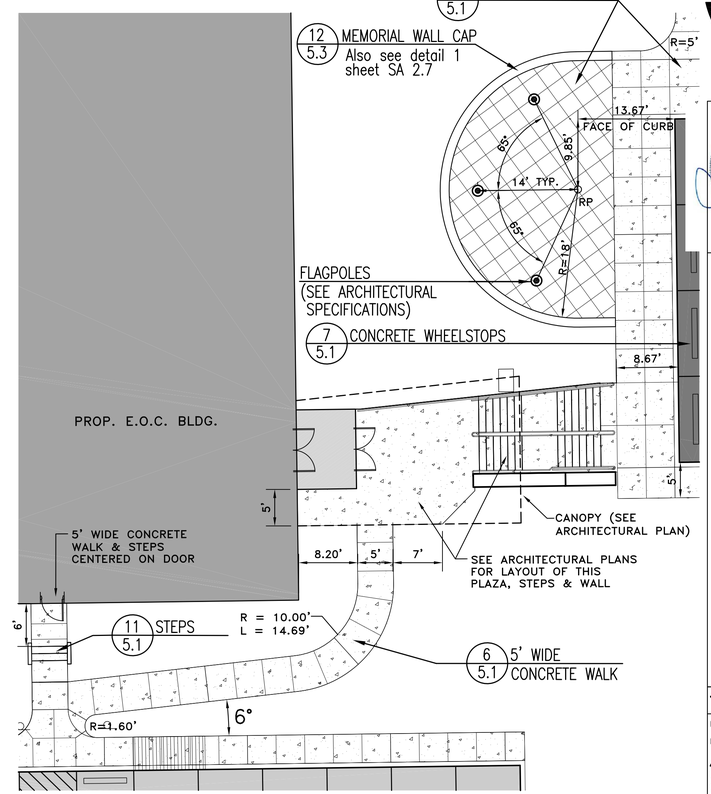


ENLARGEMENT

0' 10' 20' 30'
SCALE: 1"=10'

## LEGEND

**EXISTING**

- Boundary
- R/W & Other Property Lines
- Fence
- Guardrail
- Building (On-site and Off-site)
- Road
- Pavement

**PROPOSED**

- Onsite Medium-Duty Asphalt Pavement
- Light-Duty Asphalt Pavement
- Temporary Asphalt Pavement*
- Concrete Walkway or Pavement

*The "Temporary Asphalt Pavement" Shall be the Same Section as Medium-Duty Asphalt Pavement

N

0' 30' 60' 90'
SCALE: 1"=30'

Professional Certification. I hereby certify that these documents were prepared or approved by me, and that I am a duly licensed professional engineer under the laws of the State of Maryland, License No. 14230, Expiration Date: 12/09/14.


Tesseract
TESSERACT SITES, INC
401 Washington Ave., Suite 303
Towson, Maryland, 21204
P. 410.321.7600
F. 410.321.7601

EDMEADES & STROMDAHL, LTD.
11 North Main Street
Bel Air, Maryland 21014
Phone: 410.879.0388
Fax: 410.879.4785
E-mail: lhyde@cedarch.com


STROMDAHL

STATE OF MARYLAND
LARRY HYDE
No. 14230
PROFESSIONAL ENGINEER

# BUILDING & PARKING LOT LAYOUT PLAN
## HARFORD COUNTY EOC PHASE 1
2220 ADY ROAD
FOREST HILL, MD 21050

COPYRIGHTED EDMEADES & STROMDAHL, LTD. 2008

Job No: 08009

Date: 12-10-12

Rev:
2 2-15-13
Concrete slab shown over fuel tanks

Sheet No. C 5.0

EDMEADES

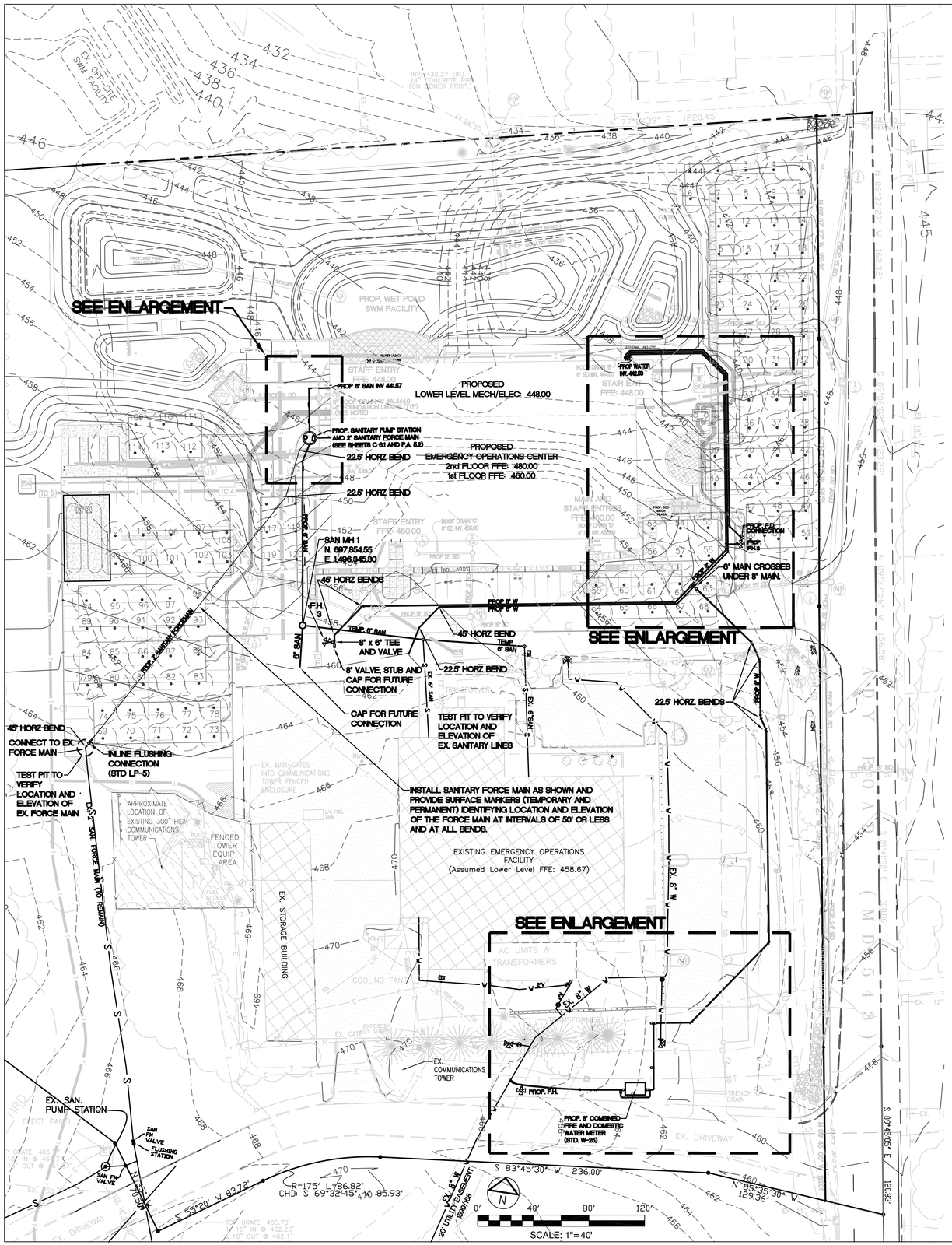


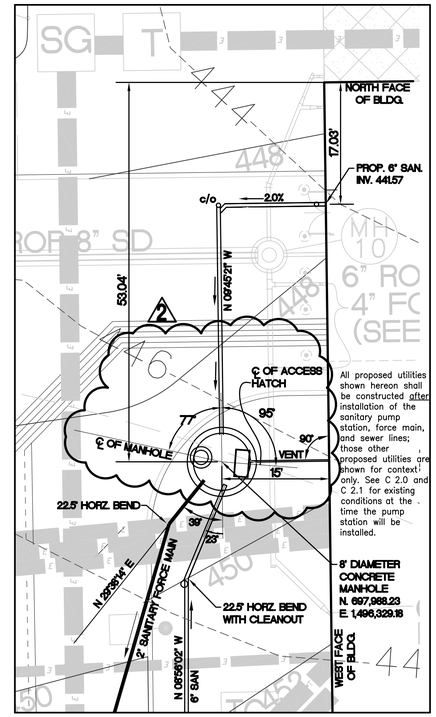


## ENLARGEMENT OF PROPOSED SANITARY SEWER PUMP STATION

SCALE: 1"=10'

See C 2.0 and C 2.1 for sequence of construction of sanitary sewer pump station, force main, incoming 6" gravity sewer pipes, and vent. The Contractor shall include in the base contract all costs associated with staging construction including but not limited to temporary electric and telecommunications lines and utility appurtenances to the pump station.

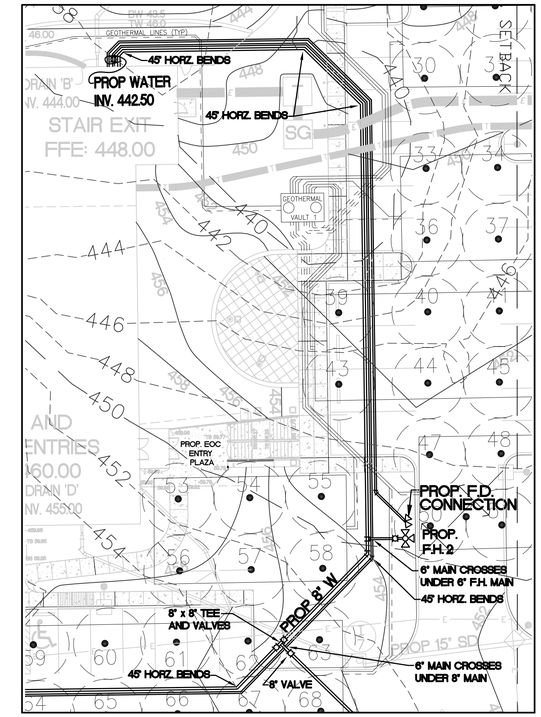


## ENLARGEMENT OF PROPOSED WATER LINES AT POINT OF ENTRY INTO NEW E.O.C. BUILDING AND ALONG EAST SIDE OF BUILDING

SCALE: 1"=20'

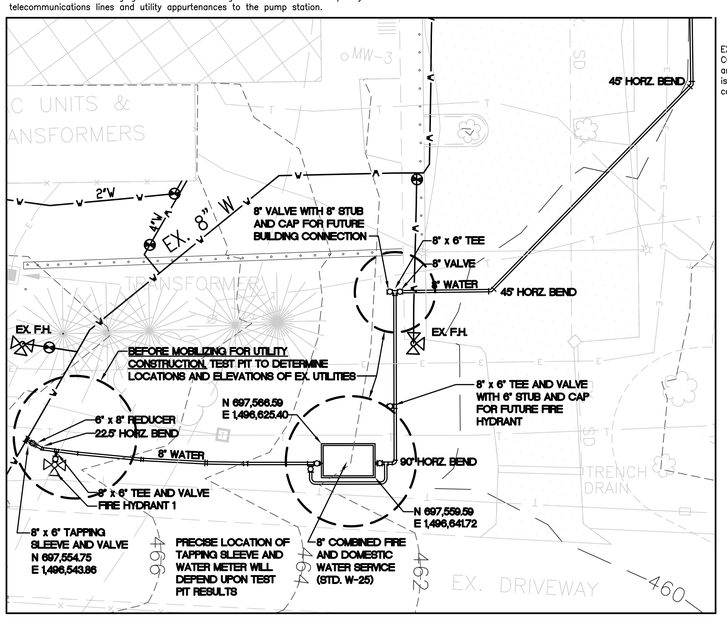


## ENLARGEMENT OF PROPOSED WATER METER AND LINES, AND EXISTING WATER LINES AND HYDRANTS, SOUTHEAST CORNER OF EXISTING E.O.C. BUILDING

SCALE: 1"=20'

Professional Certification. I hereby certify that these documents were prepared or approved by me, and that I am a duly licensed professional engineer under the laws of the State of Maryland, License No. 14230, Expiration Date: 12/09/14.

EXISTING INFORMATION AND CONDITIONS NOT GUARANTEED. VERIFY CONDITIONS AND TEST PIT EXISTING UTILITIES. The correctness and completeness of the information showing existing conditions is not guaranteed. Before beginning construction, the contractor shall perform the following tasks.

(a) Have underground utilities marked by both Miss Utility (800–257–7777) and (for on–site utilities not located by Miss Utility) by a private utility locating service. Maintain all markings throughout construction; renew markings as required; and provide markings for newly installed utilities.

(b) Verify the general accuracy of the existing conditions shown on the site/civil drawings by visual inspection of the site (all existing structures, paving and utility appurtenances visible thereon) and the utility markings made by Miss Utility and the private utility locating company;

(c) With regard to the structures and appurtenances observed as required per item (b) above, determine the type, size, location and elevation of all those existing utilities (including but not limited to all wells, storm drains, sanitary lines, water lines, gas lines, steam lines, electric lines, telephone lines, and communication ducts, and all manholes, inlets, clean–outs, valves, handholes, etc. related thereto) within the limits of construction in order to (i) avoid damaging or disrupting service, and (ii) to coordinate and facilitate construction of proposed utilities and other improvements. In addition to the Contractor's visual observation and the utility marking (as required above), the contractor shall schedule and complete Test Pitting of all existing utilities (for the purposes set forth above) and shall do so in a timely manner in order to allow time for analysis and redesign by Tesseract and/or other consultants, without delaying the project schedule.

(d) Immediately report to Tesseract the results of steps (a), (b), and (c) which might indicate any discrepancy between actual conditions and those shown on the plan, and any potential conflicts between proposed improvements and existing condition. The "report" shall consist of red–lined plans showing/noting the discrepancy.

Test pitting defined: For the purposes of this contract, excavation of utility trenches does not constitute test pitting. Test pitting is a separate operation completed at least seven days before utility installation is scheduled to begin. Test pitting means excavation to expose existing utilities in three situations: (i) where proposed utility improvements are to be located within 3' of an existing utility; (ii) where the proposed utilities will an cross existing utility (pipes, lines, structures, appurtenances); and (iii) where proposed utilities are designed to connect to existing utilities. Test pitting includes recording the type, size, location and elevation of the exposed utilities, and emailing the record to Edmeades & Stromdahl, Tesseract Sites, and the Harford County Project Manager. The record may be a legible hand–written field sketch.

ALL CONSTRUCTION SHALL BE IN ACCORDANCE WITH HARFORD COUNTY STANDARD SPECIFICATIONS AND DETAILS FOR WATER MAINS AND SEWER MAINS. PROVIDE BUTTRESSES OR RESTRAINED JOINTS AS REQUIRED BY HARFORD COUNTY STANDARDS.

SEE C 1.1 FOR GENERAL NOTES REQUIREMENTS, AND APPROVED SEDIMENT CONTROL PLANS FOR SEQUENCE OF CONSTRUCTION.


Tesseract
TESSERACT SITES, INC
401 Washington Ave., Suite 303
Towson, Maryland, 21204
P. 410.321.7600
F. 410.321.7601

EDMEADES & STROMDAHL, LTD.
11 North Main Street
Phone: 410.879.0388
E-mail: lhyde@edarch.com
Bel Air, Maryland 21014
Fax: 410.879.4785


STROMDAHL

STATE OF MARYLAND — LEON J. HYDE — No. 14230 — PROFESSIONAL ENGINEER — 10/11/12

# SANITARY SEWER & WATER PLAN
## HARFORD COUNTY EOC PHASE 1
2220 ADY ROAD
FOREST HILL, MD 21050

COPYRIGHTED EDMEADES & STROMDAHL, LTD. 2008

| | |
|---|---|
| Job No: | 08009 |
| Date: | 12-10-12 |
| Rev: | 1 2-15-13 Pump station manholes & elevations |
| Sheet No. | C 6.0 |

EDMEADES

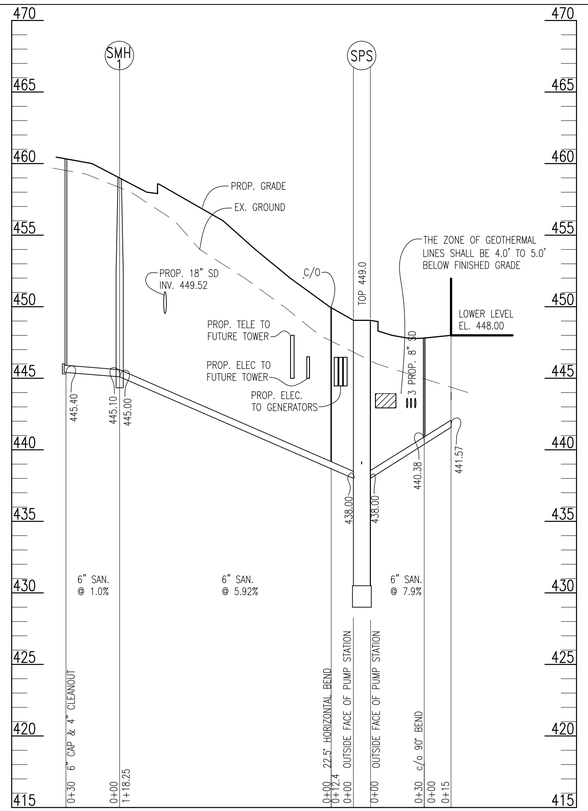


## 6" SANITARY PROFILE

SCALE: HORIZONTAL 1" = 40'
VERTICAL 1" = 5'

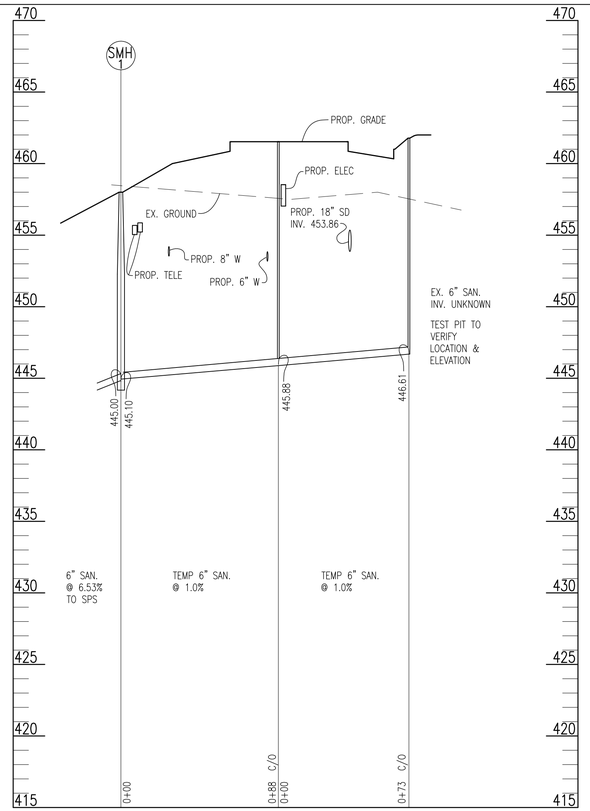


## TEMP. 6" SANITARY PROFILE

SCALE: HORIZONTAL 1" = 40'
VERTICAL 1" = 5'

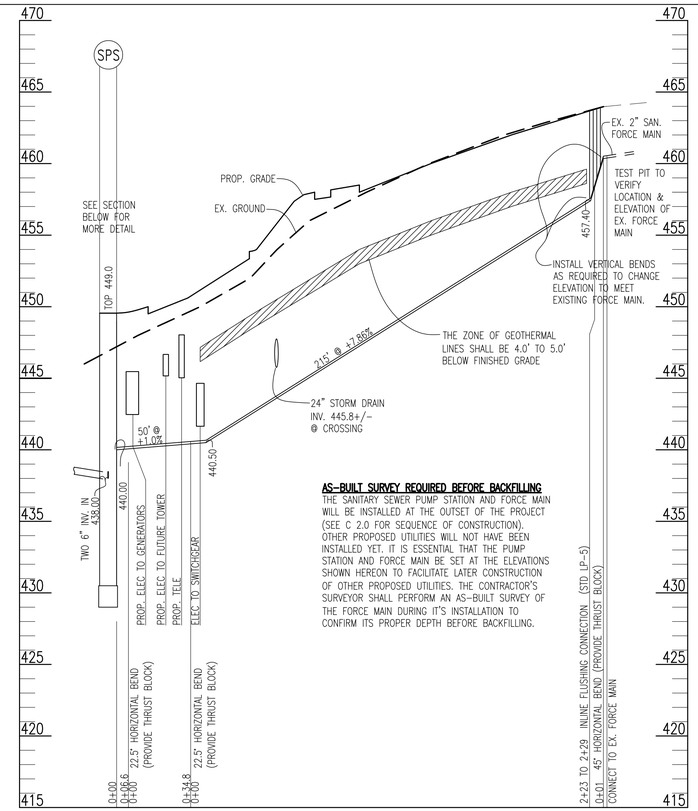


**AS-BUILT SURVEY REQUIRED BEFORE BACKFILLING**
THE SANITARY SEWER PUMP STATION AND FORCE MAIN WILL BE INSTALLED AT THE OUTSET OF THE PROJECT (SEE C 2.0 FOR SEQUENCE OF CONSTRUCTION). OTHER PROPOSED UTILITIES WILL NOT HAVE BEEN INSTALLED YET. IT IS ESSENTIAL THAT THE PUMP STATION AND FORCE MAIN BE SET AT THE ELEVATIONS SHOWN HEREON TO FACILITATE LATER CONSTRUCTION OF OTHER PROPOSED UTILITIES. THE CONTRACTOR'S SURVEYOR SHALL PERFORM AN AS-BUILT SURVEY OF THE FORCE MAIN DURING IT'S INSTALLATION TO CONFIRM ITS PROPER DEPTH BEFORE BACKFILLING.

## 2" SANITARY FORCE MAIN

SCALE: HORIZONTAL 1" = 40'
VERTICAL 1" = 5'

The Contractor shall provide structural reinforcing and geotechnical services as required to prevent lateral movement of the sanitary pump station structure, which shall be designed to withstand a maximum assumed lateral earth pressure of 2.76ksf at the base of the manhole (1.26 conventional lateral earth pressure in addition to 1.5ksf unbalanced pressure imposed by the adjacent building foundation). The assumed 1.5ksf unbalanced lateral pressure will act on approximately the lower half of the manhole as directed by the geotechnical engineer in accordance with the building foundation's zone of influence, footing elevations, and manhole location relative to the building. In addition to submitting shop drawings for the sanitary sewer pump station, the Contractor shall submit structural computations, and an explanation of the backfilling operations and geotechnical services that will be performed during construction. The computations and planned construction shall take into account the fact that in accordance with the sediment control plans, construction of the sanitary pump station takes place at the outset of the project, before mass grading and building construction.

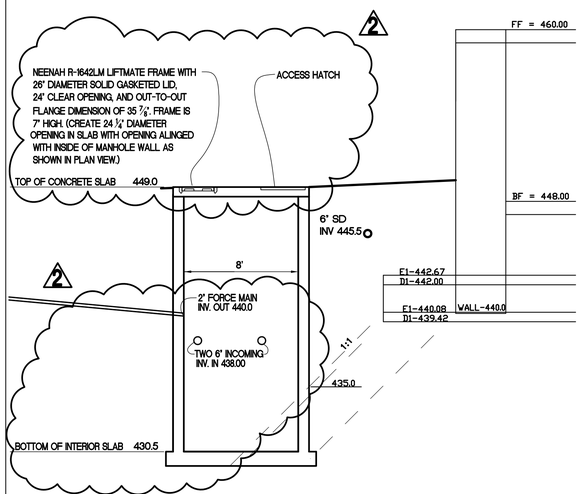


## SECTION OF SANITARY PUMP STATION

SCALE: 1" = 5'

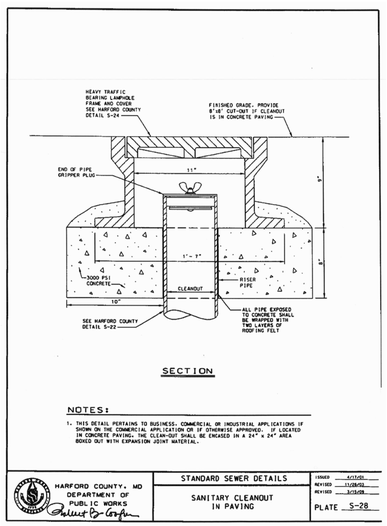


SANITARY STRUCTURE SCHEDULE

| # | TYPE | TOP ELEVATION | INV. IN | INV. OUT | REMARKS | LOCATION |
|---|---|---|---|---|---|---|
| SMH-1 | | 458.84 | 445.1 | 445.0 | HARF. CO. STD. PLATE | SEE PLAN |

NOTE: THIS DETAIL SHALL ALSO BE USED FOR STORM DRAINAGE CLEANOUTS IN PAVING.

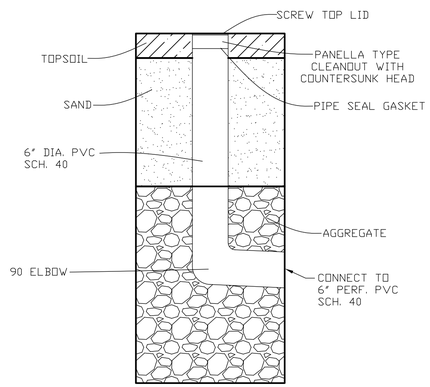


**CLEANOUT**
NTS

Professional Certification. I hereby certify that these documents were prepared or approved by me, and that I am a duly licensed professional engineer under the laws of the State of Maryland, License No. 14230, Expiration Date: 12/09/14.


Tesseract
TESSERACT SITES, INC
401 Washington Ave., Suite 303 P. 410.321.7600
Towson, Maryland, 21204 F. 410.321.7601

EDMEADES & STROMDAHL, LTD.
11 North Main Street Bel Air, Maryland 21014
Phone: 410.879.0388 Fax: 410.879.4785
E-mail: lhyde@cedarch.com


STROMDAHL

STATE OF MARYLAND
LAWRENCE J. HYDE
No. 14230
PROFESSIONAL ENGINEER
10/11/12

**SANITARY SEWER PROFILES**
**HARFORD COUNTY EOC PHASE 1**
2220 ADY ROAD
FOREST HILL, MD 21050

COPYRIGHTED EDMEADES & STROMDAHL, LTD. 2008

Job No: 08009
Date: 12-10-12
Rev:
2 2-15-13
Pump station manholes & elevations

Sheet No. C 6.1

EDMEADES

PARTIAL SITE PLAN – GEOTHERMAL WELL FIELD – PHASE 1

SCALE: 1" : 20'–0"

## GENERAL NOTES:

1. SEE CIVIL DRAWINGS FOR ADDITIONAL REQUIREMENTS FOR SITE WORK RELATED TO INSTALLATION OF WELL FIELDS.
2. CONTRACTOR SHALL FIELD VERIFY ALL DIMENSIONS, LOCATION AND ROUTING AND MAKE NECESSARY ADJUSTMENTS TO AVOID EXISTING SANITARY, WATER, ELECTRICAL CONDUIT ETC...
3. FOR GEOTHERMAL HEAT PUMP SUPPLY AND RETURN PIPING TRENCH DETAIL SEE DRAWING MA7.4.
4. FOR BORE HOLE PIPING CIRCUIT LAYOUT DETAIL SEE DRAWING MA7.4.
5. FOR WATER BORE HOLE DETAIL SEE DRAWING MA7.4.
6. FOR GEOTHERMAL VAULT DETAIL SEE DRAWING MA7.3.
7. FOR GEOTHERMAL WELL FIELD SCHEMATIC SEE DRAWING MA7.1.
8. PREPARE AND SUBMIT COORDINATED DRAWINGS TO ENSURE PROPER COORDINATION AND INSTALLATION OF WORK. DRAWINGS SHALL INCLUDE, BUT NOT BE LIMITED TO LOCATION OF GEOTHERMAL WELLS, DISTRIBUTION PIPING, GEOTHERMAL VAULT, WATER PIPING, SANITARY PIPING, STORM WATER PIPING, ELECTRICAL DISTRIBUTION, TELEPHONE AND ALL UNDERGROUND UTILITIES.

## DRAWING NOTES:

1. 3" GEOTHERMAL SUPPLY AND RETURN PIPING FROM BORE HOLE CIRCUIT TO BUILDING. GEOTHERMAL PIPING IS STACKED – FOR DETAIL SEE DRAWING MA7.4.
2. EMERGENCY GENERATORS SKID MOUNTED BASE TANKS AND FUEL PUMPS. FOR DETAIL SEE DRAWING MA7.9.
3. 25,000 GALLON, DOUBLE–WALL, FUEL OIL TANK FOR GENERATORS (TYP OF 2). APPROXIMATE SIZE: 10'–0"(DIA) X 47'–6" (LENGTH). PROVIDE PIPING, OUTDOOR PUMPS, VALVES AND ALL ACCESSORIES FOR COMPLETE FUNCTIONING SYSTEM. FOR DETAIL SEE DRAWING MA7.8 AND MA7.9. (2)
4. BORE HOLE; 1¼" SDR–9 PIPE.
5. FUEL OIL TANK LEAK DETECTION MONITORING SYSTEM LOCATED IN BASEMENT STORAGE ROOM–008.
6. FUEL OIL TANK OVERFILL EXTERIOR ALARM.
7. 3" VENT UP FROM UNDERGROUND. SEE DETAIL 1/MA7.8 FOR ADDITIONAL DETAILS. (2)

## DESIGN CRITERIA:

120 BORE HOLES @ 500 FT DEEP EACH – PHASE 1
1.96 AVG SOIL THERMAL CONDUCTIVITY
1.06 AVG SOIL THERMAL DIFFUSIVITY
~~1.02 MIN. ORGHT THERMAL CONDUCTIVITY~~
(2) GEOTHERMAL SYSTEM TO BE FILLED WITH 35% ENVIRONOL 2000 GLYCOL.

SCALE: 1" = 20'–0"

20 0 20 40

EDMEADES & STROMDAHL, LTD.
11 North Main Street
Phone: 410.879.0388
E-mail: lhyde@eslarch.com
Bel Air, Maryland 21014
Fax: 410.879.4785

Gipe Associates Inc.
Consulting Engineers
848 Fairmount Ave, Suite 102
Baltimore, Maryland 21286
P. (410)832–2420
F. (410)832–2418
Easton, Maryland
W.O.# 08095

PARTIAL SITE PLAN - GEOTHERMAL WELL FIELD - PHASE 1

**HARFORD COUNTY E.O.C.**
**PHASE 1 COMMUNICATIONS BUILDING**
2220 ADY ROAD
FOREST HILL, MD 21050

COPYRIGHTED EDMEADES & STROMDAHL, LTD. 2008

Job No: 07033

Date: DEC. 18, 2012

Rev:
(2) 2/15/13–ADD #2

BID DOCUMENTS

Sheet No.
MA1.2

# GEOTHERMAL ENERGY RECOVERY VENTILATOR SCHEDULE (ERV)

| UNIT No. (ERV) | SUPPLY FAN CFM | SUPPLY FAN E.S.P. (IN W.G.) | SUPPLY FAN RPM | SUPPLY FAN BHP | SUPPLY FAN MOTOR (HP) | EXHAUST FAN CFM | EXHAUST FAN E.S.P. (IN W.G.) | EXHAUST FAN RPM | EXHAUST FAN BHP | EXHAUST FAN MOTOR (HP) |
|---|---|---|---|---|---|---|---|---|---|---|
| 1 | 3850 | 2.5 | 1453 | 3.2 | 5.0 | 3850 | 2.5 | 1693 | 3.05 | 5.0 |
| 2 | 4900 | 2.5 | 1680 | 4.95 | 7.5 | 4900 | 2.5 | 1664 | 4.15 | 5.0 |

| UNIT No. (ERV) | ENERGY RECOVERY WHEEL PERFORMANCE: OUTSIDE AIR CFM | OUTSIDE AIR FACE VELOCITY (FPM) | EXHAUST AIR CFM | EXHAUST AIR FACE VELOCITY (FPM) | MOTOR HP | SUMMER OUTSIDE DB (°F) | SUMMER OUTSIDE WB (°F) | SUMMER RETURN DB (°F) | SUMMER RETURN WB (°F) | SUMMER SUPPLY DB (°F) | SUMMER SUPPLY WB (°F) | SUMMER EXHAUST DB (°F) | SUMMER EXHAUST WB (°F) | WINTER OUTSIDE DB (°F) | WINTER OUTSIDE WB (°F) | WINTER RETURN DB (°F) | WINTER RETURN WB (°F) | WINTER SUPPLY DB (°F) | WINTER SUPPLY WB (°F) | WINTER EXHAUST DB (°F) | WINTER EXHAUST WB (°F) |
|---|---|---|---|---|---|---|---|---|---|---|---|---|---|---|---|---|---|---|---|---|---|
| 1 | 3850 | 250 | 3850 | 250 | 0.17 | 95 | 78 | 75 | 63 | 80.6 | 68.5 | 89.5 | 73.6 | 10 | 9 | 70 | 60 | 53.4 | 48.3 | 26.7 | 26.7 |
| 2 | 4900 | 250 | 4900 | 250 | 0.17 | 95 | 78 | 75 | 63 | 81.4 | 68.2 | 88.7 | 73.0 | 10 | 9 | 70 | 60 | 54.4 | 48.7 | 30.6 | 30.6 |

| UNIT No. (ERV) | COOLING COIL (HEAT PUMP COOLING MODE): EAT DB (°F) | EAT WB (°F) | LAT DB (°F) | LAT WB (°F) | MIN. EER | SENS. CAP. (MBH) | TOTAL CAP. (MBH) | MAX. FACE VELOCITY (FPM) | MAX. APD (IN. H20) | EWT (°F) | LWT (°F) | GPM | MAX. WPD (IN. FT) |
|---|---|---|---|---|---|---|---|---|---|---|---|---|---|
| 1 | 80.6 | 68.5 | 54.6 | 53.2 | 15.7 | 112.3 | 182.0 | 500 | 1.0 | 90 | 100 | 46 | 15.0 |
| 2 | 81.4 | 68.2 | 56.9 | 55.1 | 15.9 | 137.8 | 203.5 | 500 | 1.0 | 90 | 100 | 46 | 15.0 |

| UNIT No. (ERV) | HEATING COIL (HEAT PUMP HEATING MODE): EAT DB (°F) | EAT WB (°F) | LAT DB (°F) | LAT WB (°F) | MIN. COP | SENS. CAP. (MBH) | TOTAL CAP. (MBH) | MAX. FACE VELOCITY (FPM) | MAX. APD (IN. H20) | EWT (°F) | LWT (°F) | GPM | MAX. WPD (IN. FT) | ELECTRICAL CHARACTERISTICS V/ø/Hz | MCA | MOP | MAX OPER WEIGHT (LBS) | BASED ON: AAON MODEL # |
|---|---|---|---|---|---|---|---|---|---|---|---|---|---|---|---|---|---|---|
| 1 | 53.4 | 48.3 | 70 | 59.2 | 6.9 | 180.2 | 180.2 | 500 | 1.0 | 40 | 33.4 | 46 | 20.0 | 460/3/60 | 41 | 50 | 3300 | RN-016 |
| 2 | 54.4 | 48.7 | 72 | 60 | 6.9 | 93.6 | 93.6 | 500 | 1.0 | 40 | 32.8 | 46 | 20.0 | 460/3/60 | 48 | 60 | 3350 | RN-018 |

2

NOTES:

1. EXTERNAL STATIC PRESSURE (E.S.P.) EQUALS THE STATIC PRESSURE REQUIRED AT THE CONNECTIONS OF DUCT WORK TO THE ENERGY RECOVERY VENTILATOR.
2. INTERNAL PRESSURE DROP SHALL INCLUDE 1.0 INCHES STATIC PRESSURE FOR FILTER LOADING.
3. UNIT TO INCLUDE A FACTORY MOUNTED NON-FUSED DISCONNECT.
4. PROVIDE DUCT SMOKE DETECTORS IN BOTH SUPPLY AND RETURN DUCT.
5. UNIT SHALL HAVE SINGLE POINT ELECTRICAL CONNECTION.
6. PROVIDE DDC CONTROLS FOR ENERGY RECOVERY VENTILATOR. COORDINATE WITH ATC CONTRACTOR.
7. IN SUMMER CONDITIONS, SUPPLY AIR SHALL BE REHEATED FROM 55°F TO 72°F. SUPPLY AIR TEMPERATURE SHALL BE 72°F FOR BOTH SUMMER AND WINTER CONDITIONS.
8. UNIT SHALL HAVE R-410A REFRIGERANT.
9. UNIT SHALL HAVE MODULATION CAPACITY COMPRESSORS FROM 10-100% AND INDEPENDENT REFRIGERATION CIRCUIT FOR EACH COMPRESSOR.
10. PROVIDE MERV-13 FILTERS FOR ENERGY RECOVERY VENTILATOR.
11. UNIT CAPACITY SCHEDULED IS REQUIRED CAPACITY. SELECT UNITS BASED ON 35% ENVIRONOL 2000 GLYCOL. 2

# GEOTHERMAL ROOFTOP UNIT SCHEDULE (RTU)

| UNIT No. (RTU) | SERVICE | LOCATION | SUPPLY FAN CFM | SUPPLY FAN E.S.P. (IN W.G.) | SUPPLY FAN RPM | SUPPLY FAN BHP | SUPPLY FAN MOTOR (HP) | RETURN FAN CFM | RETURN FAN E.S.P. (IN W.G.) | RETURN FAN RPM | RETURN FAN BHP | RETURN FAN MOTOR (HP) |
|---|---|---|---|---|---|---|---|---|---|---|---|---|
| 1 | E.O.C. | ROOFTOP | 18,000 | 2.0 | 1390 | 7.2 | 10 | 18,000 | 1.0 | 1431 | 3.2 | 5.0 |
| 2 | E.O.C. | ROOFTOP | 18,000 | 2.0 | 1390 | 7.2 | 10 | 18,000 | 1.0 | 1431 | 3.2 | 5.0 |
| 3 | DISPATCH | ROOFTOP | 26,000 | 2.0 | 1391 | 13.8 | 20.0 | 26,000 | 1.0 | 1554 | 7.4 | 10.0 |
| 4 | DISPATCH | ROOFTOP | 26,000 | 2.0 | 1391 | 13.8 | 20.0 | 26,000 | 1.0 | 1554 | 7.4 | 10.0 |

| UNIT No. (RTU) | REFRIGERANT TO AIR COIL: COIL CFM | COOLING MODE EAT DB (°F) | EAT WB (°F) | LAT DB (°F) | LAT WB (°F) | SENS. CAP. (MBH) | TOTAL CAP. (MBH) | MAX. FACE VELOCITY (FPM) | HOT GAS REHEAT COIL (REHEAT MODE) LAT DB (°F) | LAT WB (°F) | SENS. CAP. (MBH) | MAX. FACE VELOCITY (FPM) | MAX. APD (IN. H20) | HEATING MODE EAT DB (°F) | LAT DB (°F) | SENS. CAP. (MBH) |
|---|---|---|---|---|---|---|---|---|---|---|---|---|---|---|---|---|
| 1 | 18,000 | 79.5 | 65 | 55.7 | 54.3 | 492.4 | 599.5 | 500 | 72.8 | 60.9 | 373 | 500 | 1.0 | 60.0 | 102.6 | 843.0 |
| 2 | 18,000 | 79.5 | 65 | 55.7 | 54.3 | 492.4 | 599.5 | 500 | 72.8 | 60.9 | 373 | 500 | 1.0 | 60.0 | 102.6 | 843.0 |
| 3 | 26,000 | 77.2 | 63.3 | 55.3 | 53.6 | 678.8 | 793.5 | 500 | 70.3 | 59.5 | 495 | 500 | 1.0 | 60.0 | 100.8 | 1121.9 |
| 4 | 26,000 | 77.2 | 63.3 | 55.3 | 53.6 | 678.8 | 793.5 | 500 | 70.3 | 59.5 | 495 | 500 | 1.0 | 60.0 | 100.8 | 1121.9 |

| UNIT No. (RTU) | CONDENSER GPM | MAX. WPD (FT. H20) | COOLING MODE EWT (°F) | LWT (°F) | HEAT OF REJECTION (MBH) | HEATING MODE EWT (°F) | LWT (°F) | HEAT OF ABSORBTION (MBH) | ELECTRICAL CHARACTERISTICS v/ø/Hz | FLA | MCA | MOP | OUTSIDE AIR MIN. CFM | MAX. CFM | MAX OPER WEIGHT (LBS) | REMARKS (BASED ON) |
|---|---|---|---|---|---|---|---|---|---|---|---|---|---|---|---|---|
| 1 | 135 | 15 | 95 | 105 | 800.1 | 45 | 35 | 674.4 | 460/3/60 | 118 | 122 | 125 | 1000 | 1000 | 7500 | AAON MODEL #RN-050 |
| 2 | 135 | 15 | 95 | 105 | 800.1 | 45 | 35 | 674.4 | 460/3/60 | 118 | 122 | 125 | 1000 | 1000 | 7500 | AAON MODEL #RN-050 (STAND BY) |
| 3 | 189 | 15 | 95 | 105 | 1094.4 | 45 | 35 | 883.2 | 460/3/60 | 190 | 196 | 200 | 750 | 750 | 7900 | AAON MODEL #RN-070 |
| 4 | 189 | 15 | 95 | 105 | 1094.4 | 45 | 35 | 883.2 | 460/3/60 | 190 | 196 | 200 | 750 | 750 | 7900 | AAON MODEL #RN-070 (STAND BY) |

NOTES:

1. EXTERNAL STATIC PRESSURE (E.S.P.) EQUALS THE STATIC PRESSURE REQUIRED AT THE CONNECTIONS OF DUCT WORK TO THE AIR HANDLING UNIT.
2. PROVIDE MERV-13 FILTERS.
3. UNIT TO INCLUDE A FACTORY MOUNTED NON-FUSED DISCONNECT.
4. PROVIDE DUCT SMOKE DETECTORS IN BOTH SUPPLY AND RETURN DUCT.
5. UNIT SHALL HAVE SINGLE POINT ELECTRICAL CONNECTION.
6. PROVIDE DDC CONTROLS FOR AIR HANDLING UNIT. COORDINATE WITH ATC CONTRACTOR.
7. UNIT SHALL HAVE R-410A REFRIGERANT.
8. PROVIDE AN ULTRA-VIOLET C-BAND (UVC) DISINFECTION SYSTEM FOR MOLD, BACTERIA AND ODOR CONTROL IN EACH AIR HANDLING UNIT.
9. PROVIDE EACH UNIT WITH HOT GAS REHEAT.
10. UNIT CAPACITY SCHEDULED IS REQUIRED CAPACITY. SELECT UNITS BASED ON 35% ENVIRONOL 2000 GLYCOL. 2

# HVAC EXPANSION TANK SCHEDULE

| TANK # | SYSTEM | SYSTEM VOLUME (GALLONS) | MAX. TEMPERATURE (°F) | MIN. TEMPERATURE (°F) | MAX. OPERATING PRESSURE, Po (PSIG) | MIN. FILL PRESSURE, Pf (PSIG) | MIN. TANK ACCEPTANCE VOLUME (GALLONS) | MAX. TANK DIMENSIONS HEIGHT (IN.) | MAX. TANK DIMENSIONS DIAMETER (IN.) | FLUID TYPE AND CONCENTRATION | APPROXIMATE OPERATING WEIGHT (LBS.) | REMARKS |
|---|---|---|---|---|---|---|---|---|---|---|---|---|
| 1 | GEOTHERMAL SYSTEM | 14200 | 100 | 32 | 45 | 25 | 396 | 74 | 40 | WATER | 4500 | BASED ON TACO MODEL # CA1500 |

# FAN SCHEDULE

| No. | SERVICE | LOCATION | DRIVE TYPE | STD. AIR CFM HIGH | STD. AIR CFM LOW | SP (IN $H_2O$) | FAN MOTOR (HP) | FAN RPM | ELECTRICAL CHARACTERISTICS V/ø/Hz | FAN TYPE | BASED ON | NOTES |
|---|---|---|---|---|---|---|---|---|---|---|---|---|
| 1 | EXHAUST | FIRE PUMP ROOM - 001 | BELT | 1200 | 1200 | 0.5 | 1/2 | 890 | 480/3/60 | PROPELLER SIDEWALL | GREENHECK MODEL #SBE-2H24 | 1 |
| 2 | EXHAUST | MECH/PUMP ROOM - 009 | BELT | 1700 | 1700 | 0.5 | 3/4 | 996 | 480/3/60 | PROPELLER SIDEWALL | GREENHECK MODEL #SBE-3H24 | 1 |
| 3 | EXHAUST | 1ST FLOOR - EAST CORRIDOR | BELT | 4300 | 4300 | 1.0 | 1-1/2 | 892 | 480/3/60 | INLINE CENTRIFUGAL | GREENHECK MODEL #BSQ-240HP | 2 |
| 4 | EXHAUST | 1ST FLOOR - WEST CORRIDOR | BELT | 2400 | 2400 | 1.0 | 1.0 | 1500 | 480/3/60 | ROOF CENTRIFUGAL | GREENHECK MODEL #BSQ-160HP | 2 |
| 5 | EXHAUST | 2ND FLOOR - EAST CORRIDOR | BELT | 2400 | 2400 | 1.0 | 1.0 | 1633 | 480/3/60 | ROOF CENTRIFUGAL | GREENHECK MODEL #GB-141 | 3 |
| 6 | EXHAUST | 2ND FLOOR - WEST CORRIDOR | BELT | 3900 | 3900 | 1.0 | 1-1/2 | 1245 | 480/3/60 | ROOF CENTRIFUGAL | GREENHECK MODEL #GB-180 | 3 |

NOTES:

1. SIDEWALL PROPELLER FAN SHALL INCLUDE OSHA GUARD, AND MOTORIZED DAMPER.
2. IN-LINE CENTRIFUGAL EXHAUST FAN.
3. BELT-DRIVEN ROOF MOUNTED CENTRIFUGAL FAN. PROVIDE WITH 18" HIGH CURB AND MOTORIZED DAMPER.

# PUMP SCHEDULE

| NO. | SERVICE | GPM | FT. OF HEAD | HP | RPM | SIZE (INCHES) | ELECT. CHAR. V/ø/Hz | REMARKS | BASED ON |
|---|---|---|---|---|---|---|---|---|---|
| 1 | GEOTHERMAL HEAT PUMP LOOP | 1715 | 180 | 125 | 1760 | – | 460/3/60 | BASE MOUNTED | TACO MODEL #FI 8013 |
| 2 | GEOTHERMAL HEAT PUMP LOOP | 1715 | 180 | 125 | 1760 | – | 460/3/60 | BASE MOUNTED (BACK-UP) | TACO MODEL #FI 8013 |

NOTES:

1. PUMPS P-1 AND P-2 SHALL BE PROVIDED WITH VFD'S.
2. BASE PUMP SELECTION ON 35% ENVIRONOL 2000 GLYCOL. 2

# AIR COOLED CONDENSERS (IN-RACK COOLING OUTDOOR UNITS)

| No. | SERVES | CONDENSER F.L.A. | M.C.A. | M.O.P. | ELECTRICAL V/PH/Hz | REMARKS | QTY. |
|---|---|---|---|---|---|---|---|
| ACCU 10-12 | COMPUTER CONTROL - 167 | 4.8 | 15 | 15 | 208/1/60 | BASED ON: APC MODEL #ACCD75214 | 3 |

NOTES:

# ELECTRIC WALL HEATER SCHEDULE

| NO. | LOCATION | CFM | KW | BTU/HR | ELECT. CHAR. V/ø/Hz | REMARKS |
|---|---|---|---|---|---|---|
| EWH-1 | STAIR 2 - BASEMENT LEVEL | 245 | 4.0 | 13.6 | 208/1/60 | BASED ON TRANE MODEL #UHWA |
| EWH-2 | STAIR 3 - BASEMENT LEVEL | 245 | 4.0 | 13.6 | 208/1/60 | BASED ON TRANE MODEL #UHWA |
| EWH-3 | STAIR 1 - FIRST FLOOR | 245 | 4.0 | 13.6 | 208/1/60 | BASED ON TRANE MODEL #UHWA |

NOTES:

1. PROVIDE UNIT WITH FACTORY-INSTALLED DISCONNECTS AND THERMOSTATS.
2. UNITS TO BE FULLY-RECESSED INTO WALL.

# ELECTRIC UNIT HEATER SCHEDULE

| NO. | LOCATION | CFM | KW | TOTAL CAP. (MBH) | ELECT. CHAR. V/ø/Hz | REMARKS |
|---|---|---|---|---|---|---|
| EUH-1 | FIRE PUMP ROOM - 001 | 530 | 5.0 | 17.1 | 460/1/60 | BASED ON MODINE MODEL #HER-50 |
| EUH-2 | FIRE PUMP ROOM - 001 | 530 | 5.0 | 17.1 | 460/1/60 | BASED ON MODINE MODEL #HER-50 |
| EUH-3 | MECH/PUMP ROOM - 009 | 530 | 5.0 | 17.1 | 460/1/60 | BASED ON MODINE MODEL #HER-50 |
| EUH-4 | MECH/PUMP ROOM - 009 | 530 | 5.0 | 17.1 | 460/1/60 | BASED ON MODINE MODEL #HER-50 |

NOTES:

1. PROVIDE UNIT WITH FACTORY-INSTALLED DISCONNECTS AND THERMOSTATS.

# ELECTRIC CEILING HEATER SCHEDULE

| NO. | LOCATION | CFM | KW | BTU/HR | ELECT. CHAR. V/ø/Hz | REMARKS |
|---|---|---|---|---|---|---|
| EH-1 | VESTIBULE ENTRY - 100 | 400 | 5.0 | 17.1 | 208/1/60 | BASED ON QMARK MODEL #CDF-558 |
| EH-2 | VESTIBULE - 113 | 400 | 5.0 | 17.1 | 208/1/60 | BASED ON QMARK MODEL #CDF-558 |

NOTES:

1. PROVIDE UNIT WITH FACTORY-INSTALLED DISCONNECTS AND THERMOSTATS.
2. UNITS TO BE FULLY-RECESSED INTO CEILING.

EDMEADES & STROMDAHL, LTD.
11 North Main Street
Bel Air, Maryland 21014
Phone: 410.879.0388
Fax: 410.879.4785
E-mail: lhyde@eslarch.com

Gipe Associates Inc.
Consulting Engineers
849 Fairmount Ave Suite 102
Baltimore, Maryland 21286
P (410)832-2420
F (410)832-2418
Easton, Maryland
W.O.# 08095

MECHANICAL SCHEDULES

HARFORD COUNTY E.O.C.
PHASE 1 COMMUNICATIONS BUILDING
2220 ADY ROAD
FOREST HILL, MD 21050

COPYRIGHTED EDMEADES & STROMDAHL, LTD. 2008

Job No: 07033

Date: DEC. 18, 2012

Rev:
2 2/15/13-ADD #2

BID DOCUMENTS

Sheet No. MA9.1

STROMDAHL

EDMEADES

# E.O.C. WATER TO AIR GEOTHERMAL HEAT PUMP SCHEDULE

| WSHP NO. | AREA SERVED | TYPE | OUTSIDE AIR | FAN | | | COOLING COIL CHARACTERISTICS | | | | | | | | | | HEATING COIL CHARACTERISTICS | | | | | | | | GROUND LOOP | | | | ELECTRICAL CHAR | | UNIT PIPE CONNECTIONS | | | BASED ON |
|---|---|---|---|---|---|---|---|---|---|---|---|---|---|---|---|---|---|---|---|---|---|---|---|---|---|---|---|---|---|---|---|---|---|---|
| | | | | DESIGN CFM | ESP (in.H2O) | MOTOR HP | TOTAL CAP (MBH) | SENS CAP (MBH) | EAT DB (°F) | EAT WB (°F) | LAT DB (°F) | EWT (°F) | LWT(°F) | MIN EER | MAX KW INPUT | HEAT OF REJECTION (MBH) | TOTAL CAP (MBH) | EAT (°F) | LAT (°F) | EWT (°F) | LWT (°F) | MIN COP | MAX KW INPUT | HEAT OF EXTRACTION (MBH) | FLOW (GPM) | MAX PD (ft. H2O) | FLUID TYPE 2 | MCA | FUSE SIZE | V/ø/Hz | HPWS | HPWR | CD | |
| 0-1 | BASEMENT FLOOR | HORIZONTAL | 450 | 1750 | 0.5 | 1/2 | 42.4 | 35.9 | 77.0 | 65.0 | 58.2 | 90.0 | 100.1 | 13.4 | 3.2 | 53.7 | 40.8 | 70.0 | 97.5 | 45.0 | 38.9 | 4.3 | 2.80 | 32.30 | 10.7 | 12.75 | WATER | 9.1 | 15 | 480/3/60 | 3/4" | 3/4" | 3/4" | McQuay Model # WCCW4042 |
| 0-2 | BASEMENT FLOOR | HORIZONTAL | - | 870 | 0.5 | 1/3 | 28.6 | 21.2 | 77.0 | 65.0 | 55.5 | 90.0 | 98.4 | 13.8 | 2.1 | 36.3 | 27.2 | 70.0 | 97.3 | 45.0 | 40.0 | 4.0 | 2.00 | 21.23 | 8.6 | 7.60 | WATER | 6.9 | 15 | 480/3/60 | 3/4" | 3/4" | 3/4" | McQuay Model # WCCW4030 |
| 0-3 | BASEMENT FLOOR | HORIZONTAL | - | 1700 | 0.5 | 3/4 | 47.8 | 39.4 | 77.0 | 65.0 | 57.7 | 90.0 | 98.8 | 13.4 | 3.7 | 60.8 | 46.5 | 70.0 | 92.5 | 45.0 | 39.6 | 4.0 | 3.43 | 36.54 | 13.8 | 20.60 | WATER | 9.8 | 15 | 480/3/60 | 3/4" | 3/4" | 3/4" | McQuay Model # WCCW4048 |
| 0-4 | BASEMENT FLOOR | CONSOLE | - | 275 | 0.5 | 0.033 | 10.9 | 7.6 | 77.0 | 65.0 | 51.2 | 90.0 | 99.4 | 13.4 | 0.8 | 13.4 | 11.1 | 70.0 | 107.2 | 45.0 | 38.9 | 3.9 | 0.83 | 8.60 | 2.9 | 3.00 | WATER | 5.4 | 6 | 277/1/60 | 5/8' | 5/8" | 3/4" | McQuay Model # WMHW1012 |
| 1-1 | 1ST FLOOR | VERTICAL | - | 730 | 0.5 | 1/2 | 29.9 | 27.8 | 77.0 | 65.0 | 58.1 | 90.0 | 99.6 | 16.1 | 1.9 | 36.3 | 26.7 | 70.0 | 87.9 | 45.0 | 39.2 | 4.9 | 1.58 | 21.30 | 7.3 | 6.60 | WATER | 16.8 | 25 | 277/1/60 | 3/4" | 3/4" | 3/4" | McQuay Model # WVFW1030 |
| 1-2 | 1ST FLOOR | HORIZONTAL | - | 1565 | 0.5 | 3/4 | 47.0 | 37.3 | 77.0 | 65.0 | 56.7 | 90.0 | 98.8 | 13.4 | 3.7 | 59.8 | 45.4 | 70.0 | 94.4 | 45.0 | 39.6 | 3.9 | 3.45 | 35.70 | 13.8 | 20.60 | WATER | 9.8 | 15 | 480/3/60 | 3/4" | 3/4" | 3/4" | McQuay Model # WCCW4048 |
| 1-3 | 1ST FLOOR | HORIZONTAL | - | 3000 | 0.5 | 3 | 117.6 | 95.0 | 77.0 | 65.0 | 59.2 | 90.0 | 99.8 | 13.4 | 9.3 | 149.6 | 119.5 | 70.0 | 92.1 | 45.0 | 38.8 | 5.3 | 6.65 | 95.70 | 30.0 | 40.00 | WATER | 23.8 | 30 | 480/3/60 | 1 1/4" | 1 1/4" | 7/8" | McQuay Model # WCCW1120 |
| 1-4 | 1ST FLOOR | HORIZONAL | 100 | 1045 | 0.5 | 1/3 | 29.0 | 22.7 | 77.0 | 65.0 | 57.2 | 90.0 | 100.6 | 13.4 | 2.2 | 37.0 | 27.5 | 70.0 | 93.8 | 45.0 | 38.8 | 3.1 | 1.96 | 21.48 | 7.0 | 5.17 | WATER | 6.9 | 15 | 480/3/60 | 3/4" | 3/4" | 3/4" | McQuay Model # WCCW4030 |
| 1-5 | 1ST FLOOR | HORIZONAL | 65 | 725 | 0.5 | 1/3 | 20.7 | 17.8 | 77.0 | 65.0 | 57.7 | 90.0 | 99.3 | 13.5 | 1.5 | 26.3 | 19.0 | 70.0 | 90.4 | 45.0 | 40.0 | 4.3 | 1.29 | 14.71 | 5.5 | 8.90 | WATER | 10.3 | 15 | 277/1/60 | 1/2" | 1/2" | 3/4" | McQuay Model # WCCW4019 |
| 1-6 | 1ST FLOOR | HORIZONAL | 65 | 725 | 0.5 | 1/3 | 20.7 | 17.8 | 77.0 | 65.0 | 57.7 | 90.0 | 99.3 | 13.5 | 1.5 | 26.3 | 19.0 | 70.0 | 90.4 | 45.0 | 40.0 | 4.3 | 1.29 | 14.71 | 5.5 | 8.90 | WATER | 10.3 | 15 | 277/1/60 | 1/2" | 1/2" | 3/4" | McQuay Model # WCCW4019 |
| 1-7 | 1ST FLOOR | HORIZONAL | 235 | 1620 | 0.5 | 3/4 | 47.0 | 37.3 | 77.0 | 65.0 | 56.7 | 90.0 | 98.8 | 13.4 | 3.7 | 59.8 | 45.4 | 70.0 | 94.4 | 45.0 | 39.6 | 3.9 | 3.45 | 35.70 | 13.8 | 20.60 | WATER | 9.8 | 15 | 480/3/60 | 3/4" | 3/4" | 3/4" | McQuay Model # WCCW4048 |
| 1-8 | 1ST FLOOR | VERTICAL | 900 | 1660 | 0.5 | 1/2 | 43.4 | 36.9 | 77.0 | 65.0 | 56.3 | 90.0 | 99.8 | 15.5 | 2.8 | 52.9 | 40.7 | 70.0 | 92.6 | 45.0 | 39.3 | 4.6 | 2.60 | 31.70 | 11.0 | 13.14 | WATER | 9.2 | 15 | 480/3/60 | 3/4" | 3/4" | 3/4" | McQuay Model # WVFW1042 |
| 1-9 | 1ST FLOOR | VERTICAL | 200 | 600 | 0.5 | 1/6 | 14.3 | 13.0 | 77.0 | 65.0 | 60.1 | 90.0 | 103.4 | 13.8 | 1.0 | 17.7 | 13.0 | 70.0 | 86.7 | 45.0 | 37.8 | 4.5 | 0.86 | 9.86 | 2.5 | 2.40 | WATER | 7.2 | 15 | 277/1/60 | 1/2" | 1/2" | 3/4" | McQuay Model # WVFW1015 |
| 1-10 | 1ST FLOOR | VERTICAL | 240 | 850 | 0.5 | 1/2 | 29.6 | 26.6 | 77.0 | 65.0 | 56.7 | 90.0 | 99.6 | 13.6 | 2.2 | 37.1 | 26.3 | 70.0 | 89.8 | 45.0 | 39.1 | 4.4 | 1.80 | 20.30 | 4.7 | 7.50 | WATER | 16.8 | 25 | 277/1/60 | 1/2" | 1/2" | 3/4" | McQuay Model # WVFW1030 |
| 1-11 | 1ST FLOOR | VERTICAL | 235 | 850 | 0.5 | 1/2 | 29.7 | 26.6 | 77.0 | 65.0 | 56.6 | 90.0 | 98.3 | 13.6 | 2.2 | 37.1 | 26.6 | 70.0 | 90.0 | 45.0 | 39.8 | 4.4 | 1.70 | 20.60 | 5.5 | 10.49 | WATER | 16.8 | 25 | 277/1/60 | 1/2" | 1/2" | 3/4" | McQuay Model # WVFW1030 |
| 1-12 | 1ST FLOOR | VERTICAL | 275 | 985 | 0.5 | 1/2 | 30.0 | 27.9 | 77.0 | 65.0 | 58.0 | 90.0 | 98.9 | 16.3 | 1.8 | 36.3 | 26.8 | 70.0 | 88.0 | 45.0 | 39.6 | 5.0 | 1.58 | 21.42 | 8.0 | 8.06 | WATER | 16.8 | 25 | 277/1/60 | 3/4" | 3/4" | 3/4" | McQuay Model # WVFW1030 |
| 1-13 | 1ST FLOOR | HORIZONAL | 360 | 1620 | 0.7 | 3/4 | 65.6 | 47.6 | 77.0 | 65.0 | 58.2 | 90.0 | 107.8 | 13.4 | 5.9 | 84.5 | 56.0 | 70.0 | 102.0 | 45.0 | 35.0 | 3.5 | 4.70 | 44.00 | 10.7 | 12.75 | WATER | 11.7 | 15 | 480/3/60 | 3/4" | 3/4" | 3/4" | McQuay Model # WCCW4060 |
| 1-14 | 1ST FLOOR | HORIZONAL | - | 665 | 0.5 | 1/3 | 16.5 | 13.0 | 77.0 | 65.0 | 62.8 | 90.0 | 98.6 | 17.2 | 1.0 | 19.4 | 14.7 | 70.0 | 85.5 | 45.0 | 39.8 | 4.5 | 0.95 | 11.73 | 4.3 | 5.40 | WATER | 7.5 | 15 | 277/1/60 | 1/2" | 1/2" | 3/4" | McQuay Model # WCCW4015 |
| 1-15 | 1ST FLOOR | HORIZONAL | 160 | 1585 | 0.5 | 1/2 | 42.5 | 35.9 | 77.0 | 65.0 | 58.2 | 90.0 | 99.8 | 13.4 | 3.2 | 53.7 | 40.8 | 70.0 | 91.1 | 45.0 | 39.0 | 4.3 | 2.80 | 32.38 | 11.0 | 13.42 | WATER | 9.1 | 15 | 480/3/60 | 3/4" | 3/4" | 3/4" | McQuay Model # WCCW4042 |
| 1-16 | 1ST FLOOR | HORIZONTAL | - | 345 | 0.5 | 1/3 | 16.1 | 12.8 | 77.0 | 65.0 | 63.1 | 90.0 | 102.3 | 15.8 | 1.0 | 19.1 | 14.6 | 70.0 | 85.7 | 45.0 | 38.0 | 4.5 | 0.95 | 11.60 | 3.0 | 2.94 | WATER | 7.5 | 15 | 277/1/60 | 1/2" | 1/2" | 3/4" | McQuay Model # WCCW4015 |
| 1-17 | 1ST FLOOR | HORIZONAL | 160 | 1665 | 0.5 | 3/4 | 47.0 | 37.3 | 77.0 | 65.0 | 56.7 | 90.0 | 98.8 | 13.4 | 3.7 | 59.8 | 45.4 | 70.0 | 94.4 | 45.0 | 39.6 | 3.9 | 3.45 | 35.70 | 13.8 | 20.60 | WATER | 9.8 | 15 | 480/1/60 | 3/4" | 3/4" | 3/4" | McQuay Model # WCCW4048 |
| 1-18 | 1ST FLOOR | HORIZONAL | - | 395 | 0.5 | 1/3 | 16.4 | 12.9 | 77.0 | 65.0 | 62.9 | 90.0 | 99.9 | 16.7 | 1.0 | 19.3 | 14.7 | 70.0 | 85.8 | 45.0 | 39.1 | 4.5 | 0.95 | 11.70 | 3.8 | 4.44 | WATER | 7.5 | 15 | 277/1/60 | 1/2" | 1/2" | 3/4" | McQuay Model # WCCW4015 |
| 1-19 | 1ST FLOOR | HORIZONAL | - | 315 | 0.5 | 1/3 | 16.1 | 12.8 | 77.0 | 65.0 | 63.1 | 90.0 | 102.3 | 15.8 | 1.0 | 19.1 | 14.6 | 70.0 | 85.7 | 45.0 | 38.0 | 4.5 | 0.95 | 11.60 | 3.0 | 2.94 | WATER | 7.5 | 15 | 277/1/60 | 1/2" | 1/2" | 3/4" | McQuay Model # WCCW4015 |
| 1-20 | 1ST FLOOR | VERTICAL | - | 610 | 0.5 | 1/6 | 18.3 | 15.6 | 77.0 | 65.0 | 56.8 | 90.0 | 101.6 | 14.8 | 1.2 | 22.5 | 15.2 | 70.0 | 89.4 | 45.0 | 38.0 | 4.2 | 1.10 | 12.00 | 4.0 | 5.60 | WATER | 9.6 | 15 | 277/1/60 | 1/2" | 1/2" | 3/4" | McQuay Model # WVFW1019 |
| 1-21 | 1ST FLOOR | HORIZONAL | - | 1705 | 0.5 | 3/4 | 47.0 | 37.3 | 77.0 | 65.0 | 56.7 | 90.0 | 98.8 | 13.4 | 3.7 | 59.8 | 45.4 | 70.0 | 94.4 | 45.0 | 39.6 | 3.9 | 3.45 | 35.70 | 13.8 | 20.60 | WATER | 9.8 | 15 | 480/1/60 | 3/4" | 3/4" | 3/4" | McQuay Model # WCCW4048 |
| 1-22 | 1ST FLOOR | HORIZONAL | 50 | 160 | 0.5 | 1/8 | 8.1 | 6.5 | 77.0 | 65.0 | 57.5 | 90.0 | 101.7 | 13.4 | 0.8 | 9.7 | 8.8 | 70.0 | 96.2 | 45.0 | 35.5 | 3.8 | 0.70 | 8.50 | 1.5 | 3.52 | WATER | 6.0 | 15 | 277/1/60 | 1/2" | 1/2" | 3/4" | McQuay Model # WCCW4009 |
| 1-23 | 1ST FLOOR | HORIZONAL | 150 | 1540 | 0.5 | 1/2 | 42.7 | 36.0 | 77.0 | 65.0 | 58.2 | 90.0 | 98.6 | 13.5 | 3.2 | 53.8 | 41.2 | 70.0 | 91.3 | 45.0 | 39.6 | 4.3 | 2.83 | 32.70 | 12.1 | 15.90 | WATER | 9.1 | 15 | 480/3/60 | 3/4" | 3/4" | 3/4" | McQuay Model # WCCW4042 |
| 1-24 | 1ST FLOOR | HORIZONAL | 60 | 660 | 0.5 | 1/3 | 16.5 | 13.0 | 77.0 | 65.0 | 62.8 | 90.0 | 98.6 | 17.2 | 1.0 | 19.4 | 14.7 | 70.0 | 85.5 | 45.0 | 39.8 | 4.5 | 0.95 | 11.73 | 4.3 | 5.40 | WATER | 7.5 | 15 | 277/1/60 | 1/2" | 1/2" | 3/4" | McQuay Model # WCCW4015 |
| 1-25 | 1ST FLOOR | CONSOLE | - | 850 | 0.5 | 0.056 | 15.9 | 10.8 | 77.0 | 65.0 | 54.5 | 90.0 | 98.8 | 13.4 | 1.3 | 19.9 | 16.6 | 70.0 | 104.1 | 45.0 | 39.3 | 3.8 | 1.27 | 12.82 | 4.6 | 12.28 | WATER | 7.8 | 10 | 277/1/60 | 5/8' | 5/8" | 1/2" | McQuay Model # WMHW1018 |
| 1-26 | 1ST FLOOR | CONSOLE | - | 275 | 0.5 | 0.033 | 10.9 | 7.6 | 77.0 | 65.0 | 51.2 | 90.0 | 99.4 | 13.4 | 0.8 | 13.4 | 11.1 | 70.0 | 107.2 | 45.0 | 38.9 | 3.9 | 0.83 | 8.60 | 2.9 | 3.00 | WATER | 5.4 | 6 | 277/1/60 | 5/8' | 5/8" | 3/4" | McQuay Model # WMHW1012 |
| 2-1 | 2ND FLOOR | HORIZONTAL | 100 | 535 | 0.5 | 1/3 | 16.5 | 13.0 | 77.0 | 65.0 | 62.8 | 90.0 | 98.6 | 17.2 | 1.0 | 19.4 | 14.7 | 70.0 | 85.8 | 45.0 | 39.8 | 4.5 | 0.95 | 11.73 | 4.3 | 5.40 | WATER | 7.5 | 15 | 277/1/60 | 1/2" | 1/2" | 3/4" | McQuay Model # WCCW4015 |
| 2-2 | 2ND FLOOR | HORIZONTAL | 150 | 1430 | 0.5 | 1/2 | 42.7 | 36.0 | 77.0 | 65.0 | 58.2 | 90.0 | 98.6 | 13.5 | 3.2 | 53.8 | 41.2 | 70.0 | 91.3 | 45.0 | 39.6 | 4.3 | 2.83 | 32.70 | 12.1 | 15.90 | WATER | 9.1 | 15 | 480/3/60 | 3/4" | 3/4" | 3/4" | McQuay Model # WCCW4042 |
| 2-3 | 2ND FLOOR | VERTICAL | - | 750 | 0.5 | 1/2 | 29.9 | 27.8 | 77.0 | 65.0 | 58.1 | 90.0 | 99.6 | 16.1 | 1.9 | 36.3 | 26.7 | 70.0 | 87.9 | 45.0 | 39.2 | 4.9 | 1.58 | 21.30 | 7.3 | 6.60 | WATER | 16.8 | 25 | 277/1/60 | 3/4" | 3/4" | 3/4" | McQuay Model # WVFW1030 |
| 2-4 | 2ND FLOOR | HORIZONTAL | - | 1190 | 0.5 | 1/2 | 34.9 | 26.8 | 77.0 | 65.0 | 57.1 | 90.0 | 98.4 | 14.2 | 2.5 | 44.1 | 33.6 | 70.0 | 94.7 | 45.0 | 40.0 | 4.0 | 2.44 | 26.17 | 10.3 | 11.00 | WATER | 8.8 | 15 | 480/3/60 | 3/4" | 3/4" | 3/4" | McQuay Model # WCCW4036 |
| 2-5 | 2ND FLOOR | HORIZONTAL | - | 1235 | 0.5 | 1/2 | 34.9 | 26.8 | 77.0 | 65.0 | 57.1 | 90.0 | 98.4 | 14.2 | 2.5 | 44.1 | 33.6 | 70.0 | 94.7 | 45.0 | 40.0 | 4.0 | 2.44 | 26.17 | 10.3 | 11.00 | WATER | 8.8 | 15 | 480/3/60 | 3/4" | 3/4" | 3/4" | McQuay Model # WCCW4036 |
| 2-6 | 2ND FLOOR | HORIZONTAL | - | 1370 | 0.5 | 1/2 | 42.5 | 35.9 | 77.0 | 65.0 | 58.2 | 90.0 | 100.1 | 13.4 | 3.2 | 53.7 | 40.8 | 70.0 | 91.1 | 45.0 | 38.9 | 4.3 | 2.80 | 32.30 | 10.7 | 12.75 | WATER | 9.1 | 15 | 480/3/60 | 3/4" | 3/4" | 3/4" | McQuay Model # WCCW4042 |
| 2-7 | 2ND FLOOR | HORIZONTAL | - | 525 | 0.5 | 1/3 | 16.4 | 12.9 | 77.0 | 65.0 | 62.9 | 90.0 | 99.9 | 16.7 | 1.0 | 19.3 | 14.7 | 70.0 | 85.8 | 45.0 | 39.1 | 4.5 | 0.95 | 11.71 | 3.8 | 4.44 | WATER | 7.5 | 15 | 277/1/60 | 1/2" | 1/2" | 3/4" | McQuay Model # WCCW4015 |
| 2-8 | 2ND FLOOR | HORIZONTAL | - | 610 | 0.5 | 1/3 | 16.5 | 13.0 | 77.0 | 65.0 | 62.8 | 90.0 | 98.6 | 17.2 | 1.0 | 19.4 | 14.7 | 70.0 | 85.8 | 45.0 | 39.8 | 4.5 | 0.95 | 11.73 | 4.3 | 5.40 | WATER | 7.5 | 15 | 277/1/60 | 1/2" | 1/2" | 3/4" | McQuay Model # WCCW4015 |
| 2-9 | 2ND FLOOR | HORIZONTAL | 50 | 440 | 0.5 | 1/3 | 16.4 | 12.9 | 77.0 | 65.0 | 62.9 | 90.0 | 99.9 | 16.7 | 1.0 | 19.3 | 14.7 | 70.0 | 85.8 | 45.0 | 39.1 | 4.5 | 0.90 | 11.70 | 3.8 | 4.44 | WATER | 7.5 | 15 | 277/1/60 | 1/2" | 1/2" | 3/4" | McQuay Model # WCCW4015 |
| 2-10 | 2ND FLOOR | HORIZONAL | - | 570 | 0.5 | 1/3 | 16.5 | 13.0 | 77.0 | 65.0 | 62.8 | 90.0 | 98.6 | 17.2 | 1.0 | 19.4 | 14.7 | 70.0 | 85.8 | 45.0 | 39.8 | 4.5 | 0.95 | 11.73 | 4.3 | 5.40 | WATER | 7.5 | 15 | 277/1/60 | 1/2" | 1/2" | 3/4" | McQuay Model # WCCW4015 |
| 2-11 | 2ND FLOOR | HORIZONAL | 70 | 790 | 0.5 | 1/3 | 16.5 | 13.0 | 77.0 | 65.0 | 62.8 | 90.0 | 98.6 | 17.2 | 1.0 | 19.4 | 14.7 | 70.0 | 85.8 | 45.0 | 39.8 | 4.5 | 0.95 | 11.73 | 4.3 | 5.40 | WATER | 7.5 | 15 | 277/1/60 | 1/2" | 1/2" | 3/4" | McQuay Model # WCCW4015 |
| 2-12 | 2ND FLOOR | VERTICAL | 500 | 1600 | 0.7 | 1/2 | 58 | 38.1 | 77.0 | 65.0 | 56.2 | 90.0 | 97.6 | 13.4 | 4.3 | 72.8 | 56.4 | 70.0 | 92.9 | 45.0 | 40.4 | 3.7 | 4.40 | 41.20 | 14.0 | 23.30 | WATER | 11.4 | 15 | 480/3/60 | 3/4" | 3/4" | 3/4" | McQuay Model # WVFW1060 |
| 2-13 | 2ND FLOOR | HORIZONTAL | - | 1350 | 0.5 | 1/2 | 42.5 | 35.9 | 77.0 | 65.0 | 58.2 | 90.0 | 100.1 | 13.4 | 3.2 | 53.7 | 40.8 | 70.0 | 91.1 | 45.0 | 38.9 | 4.3 | 2.80 | 32.30 | 10.7 | 12.75 | WATER | 9.1 | 15 | 480/3/60 | 3/4" | 3/4" | 3/4" | McQuay Model # WCCW4042 |
| 2-14 | 2ND FLOOR | HORIZONTAL | - | 490 | 0.5 | 1/3 | 16.4 | 12.9 | 77.0 | 65.0 | 62.9 | 90.0 | 99.9 | 16.7 | 1.0 | 19.3 | 14.7 | 70.0 | 85.8 | 45.0 | 39.1 | 4.5 | 0.90 | 11.70 | 3.8 | 4.44 | WATER | 7.5 | 15 | 277/1/60 | 1/2" | 1/2" | 3/4" | McQuay Model # WCCW4015 |
| 2-15 | 2ND FLOOR | HORIZONTAL | 960 | 1410 | 0.6 | 3/4 | 44.8 | 33.4 | 77.0 | 65.0 | 58.3 | 90.0 | 101.8 | 13.4 | 3.6 | 57.7 | 42.2 | 70.0 | 90.8 | 45.0 | 37.9 | 3.7 | 3.30 | 32.80 | 9.0 | 8.93 | WATER | 9.8 | 15 | 480/3/60 | 3/4" | 3/4" | 3/4" | McQuay Model # WCCW4048 |

NOTES:

1. EXTERNAL STATIC PRESSURE (E.S.P.) EQUALS THE STATIC PRESSURE REQUIRED AT THE CONNECTION OF DUCTWORK TO THE HEAT PUMP UNIT.
2. EER AND COP VALUES INCLUDE FAN INPUT ENERGY.
3. PROVIDE HOSE KITS FOR HEAT PUMP UNITS BASED ON PIPE SIZE AS NOTED ON DRAWINGS, NOT UNIT CONNECTION SIZES.
4. PROVIDE HEAT PUMPS WITH RANDOM START RELAY TO PREVENT ALL UNITS FROM STARTING SIMULTANEOUSLY.
5. PROVIDE FILTER HOUSING AND FILTERS FOR ALL HEAT PUMPS.
6. REFRIGERANT TO BE R-410A.
7. ALL CONTROLS ON THIS PROJECT SHALL BE FULLY INTEGRATED AND COMPATIBLE WITH THE BUILDING AUTOMATION SYSTEM. COORDINATE CONTROLS BETWEEN EQUIPMENT SUPPLIER AND CONTROLS MANUFACTURER TO PROVIDE A FULLY FUNCTIONAL AND OPERATIONAL SYSTEM. 2
8. UNIT SELECTIONS SHALL BE BASED ON 35% ENVIRONAL 2000 GLYCOL.

# COMPUTER ROOM AIR CONDITIONING UNIT SCHEDULE

| NO. | SERVICE | SUPPLY AIR | | | COOLING CONDITION | | | | | | | | | | TOTAL HEAT OF REJECTION (MBH) | TOTAL COMP POWER (KW) | SYSTEM POWER INPUT (KW) | FAN (KW) | FLOW (GPM) | FILTER | | ELECT. CHAR. | BASED ON: | REMARKS |
|---|---|---|---|---|---|---|---|---|---|---|---|---|---|---|---|---|---|---|---|---|---|---|---|---|
| | | CFM | MAX ESP (IN $H_2O$) | FAN MOTOR (HP) | EAT DB (°F) | EAT WB (°F) | EWT (°F) | LWT (°F) | LAT DB (°F) | LAT WB (°F) | MAX. FACE VEL. (FPM) | MAX. W.P.D. (FT. $H_2O$) | SENS. CAP. (MBH) | TOTAL CAP. (MBH) | | | | | | %EFF | APD CLEAN / FINAL | V/ø/Hz | | |
| AC-1,2 | TRANSMITTER ROOM #218 | 10,400 | 0.2 | 7.5 | 73.0 | 62.5 | 90 | 100 | 56.0 | 53.4 | 500 | 35.0 | 189.6 | 270.1 | 358.8 | 19.43 | 26.0 | 6.57 | 83.4 | 30 | 0.75 / 1.0 | 460/3/60 | LIEBERT MODEL #DS077W | 1,3,4,5,6,7,8,9,10,11,12,13,14 |
| AC-3,4 | DATA SERVER ROOM #225 | 10,400 | 0.2 | 7.5 | 73.4 | 62.5 | 90 | 100 | 56.1 | 53.3 | 500 | 35.0 | 193.4 | 270.3 | 359.0 | 19.43 | 26.0 | 6.57 | 83.4 | 30 | 0.75 / 1.0 | 460/3/60 | LIEBERT MODEL #DS077W | 1,3,4,5,6,7,8,9,10,11,12,13,14 |
| AC-5,6,7 | UPS ROOM #002 | 10,400 | 0.5 | 7.5 | 72.9 | 62.5 | 90 | 100 | 55.1 | 52.9 | 500 | 35.0 | 199.3 | 281.3 | 366.0 | 19.49 | 24.91 | 5.41 | 85.1 | 30 | 0.75 / 1.0 | 460/3/60 | LIEBERT MODEL #VS077W | 2,3,4,5,6,7,9,10,12,13,14 |
| AC-8,9 | M/E ROOM #217 | 2,800 | 0.0 | 2.0 | 75.0 | 61.0 | 90 | 100 | 55.7 | 54.1 | 500 | 35.0 | 66.0 | 72.9 | 81.2 | 7.7 | 9.02 | 1.32 | 105.0 | 30 | 0.75 / 1.0 | 460/3/60 | LIEBERT MODEL #BU071WDA | 2,3,5,6,7,9,10,12,13,14 |

NOTES:

1. AIR CONDITIONING UNIT TO BE DOWNFLOW UNIT WITH DUCTED RETURN TO TOP OF UNIT. MANUFACTURER TO PROVIDE FLANGE FOR DUCT CONNECTION.
2. AIR CONDITIONING UNIT TO BE UPFLOW UNIT WITH RETURN GRILLE IN FRONT OF UNIT AND DISCHARGE PLENUM ON TOP OF UNIT.
3. PROVIDE UNIT WITH REMOTE MICROPROCESSOR CONTROL WITH THERMOSTAT.
4. PROVIDE UNIT WITH INFRARED HUMIDIFIER AND ELECTRIC REHEAT.
5. PROVIDE UNIT WITH SMOKE DETECTOR. WIRE ALARM TO FIRE ALARM PANEL AND AC CONTROLLER.
6. PROVIDE UNIT WITH LOCKING DISCONNECT.
7. PROVIDE UNIT WITH 2-WAY CONTROL VALVE.
8. MOUNT UNIT ON 18" HIGH STAND.
9. INSTALL 2" HIGH DRAIN PAN UNDER EACH AC UNIT. PAN SHALL EXTEND SO AS TO PROVIDE FULL COVERAGE OF UNIT.
10. PROVIDE UNIT WITH WATER DETECTION SENSORS. SENSORS SHALL BE PLACED IN DRAIN PAN AND WIRED TO AC CONTROLLER.
11. PROVIDE UNIT WITH MOTORIZED DAMPERS IN RETURN DUCT. DAMPER SHALL FAIL CLOSE UPON DEACTIVATION OF AC UNIT.
12. PROVIDE UNIT WITH TURNING VANES FOR SUPPLY AIR.
13. PROVIDE UNIT WITH SINGLE FLOAT CONDENSATE PUMP. 2
14. SELECT UNITS BASED ON 35% ENVIRONAL 2000 GLYCOL.


EDMEADES & STROMDAHL, LTD.
11 North Main Street
Phone: 410.879.0388
E-mail: lhyde@eslarch.com
Bel Air, Maryland 21014
Fax: 410.879.4785


STROMDAHL


Gipe Associates Inc.
Consulting Engineers
849 Fairmount Ave Suite 102
Towson, Maryland 21286
P. (410)832-2700
F. (410)832-2418
Easton, Maryland
W.O.# 08095


MECHANICAL SCHEDULES

HARFORD COUNTY E.O.C.
PHASE 1 COMMUNICATIONS BUILDING
2220 ADY ROAD
FOREST HILL, MD 21050

COPYRIGHTED EDMEADES & STROMDAHL, LTD. 2008

Job No: 07033

Date: DEC. 18, 2012

Rev:

2 2/15/13-ADD #2

BID DOCUMENTS

Sheet No.

MA9.2

EDMEADES

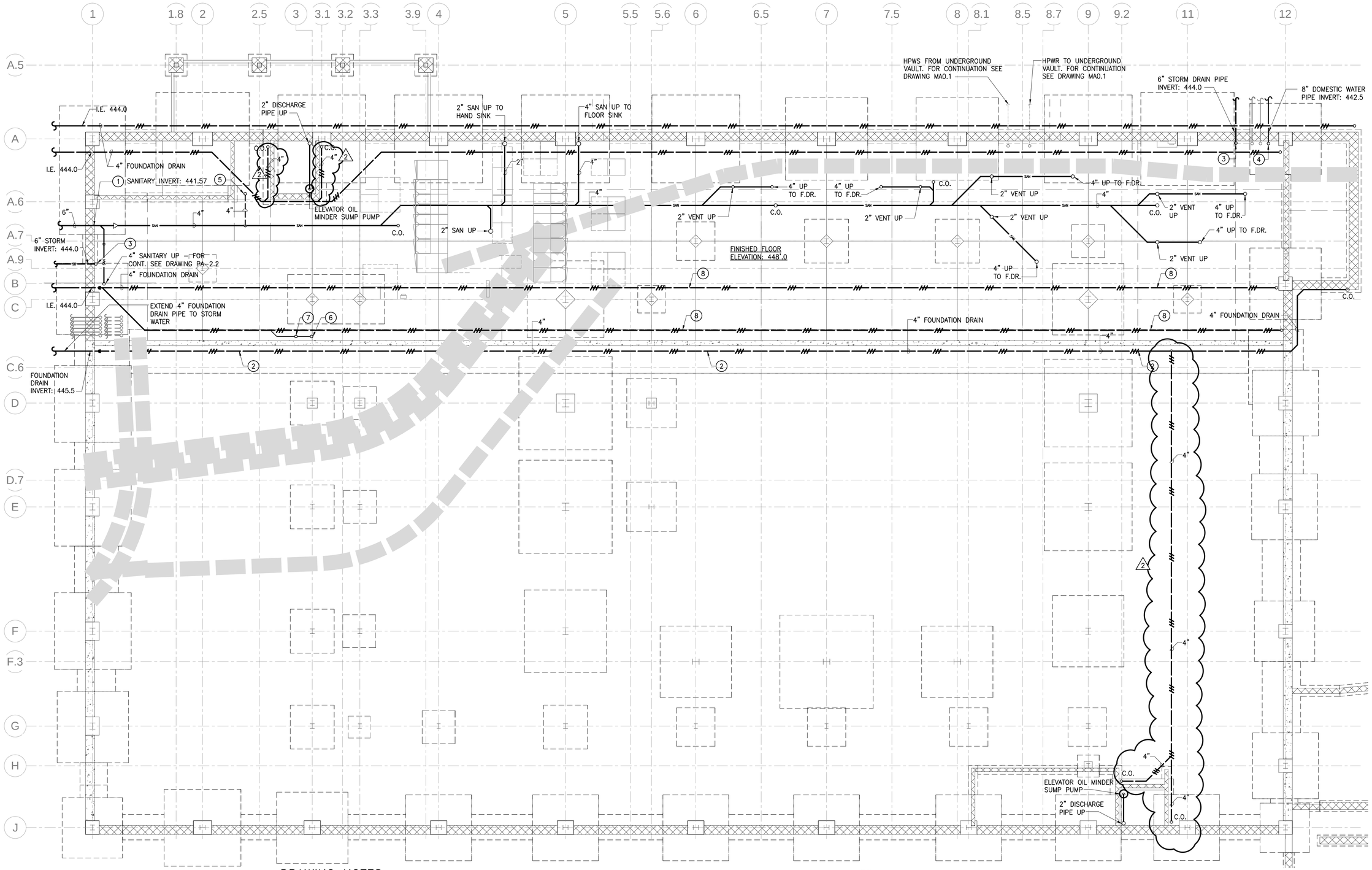


## GENERAL NOTES:

1. RUN UNDERGROUND SANITARY PIPING W/2% GRADE. ADJUST PIPE INVERTS TO KEEP TOP OF PIPES IN-LINE WHEN PIPES CHANGE SIZE.

## DRAWING NOTES:

1. INCOMING SANITARY PIPING.
2. LOCATE FOUNDATION DRAINAGE PIPE AT ELEVATION OF 448.00'
3. 6" STORM WATER PIPING UP.
4. INCOMING DOMESTIC WATER SERVICE.
5. 4" VENT UP.
6. 4" CONDENSATE DRAIN UP TO FLOOR DRAIN.
7. 2" VENT UP.
8. LOCATE FOUNDATION DRAINAGE PIPE AT ELEVATION OF 447.00.

## FOUNDATION PLAN – PLUMBING

SCALE: 1/8" = 1'-0"

SCALE: 1/8" = 1'-0"

8 0 8 16

KEY PLAN

SCALE: NONE


EDMEADES & STROMDAHL, LTD.
11 North Main Street
Phone: 410.879.0388
E-mail: lhyde@eslarch.com
Bel Air, Maryland 21014
Fax: 410.879.4785



Gipe Associates Inc.
Consulting Engineers
849 Fairmount Ave Suite 102
Baltimore, Maryland 21286
P (410)832-2420
F (410)832-2418
Easton, Maryland
W.O.# 08095


COMMUNICATION BLDG. FOUNDATION PLAN - PLUMBING PHASE I

# HARFORD COUNTY E.O.C. PHASE 1 COMMUNICATIONS BUILDING

2220 ADY ROAD
FOREST HILL, MD 21050

COPYRIGHTED EDMEADES & STROMDAHL, LTD. 2008

Job No: 07033

Date: DEC. 18, 2012

Rev:

2 2/15/13-ADD #2

BID DOCUMENTS

Sheet No. PA-2.1

NOTE:
FOR PUMP ARRANGEMENT AND PIPING CONFIGURATION SEE DETAIL 2/PA-5.2.

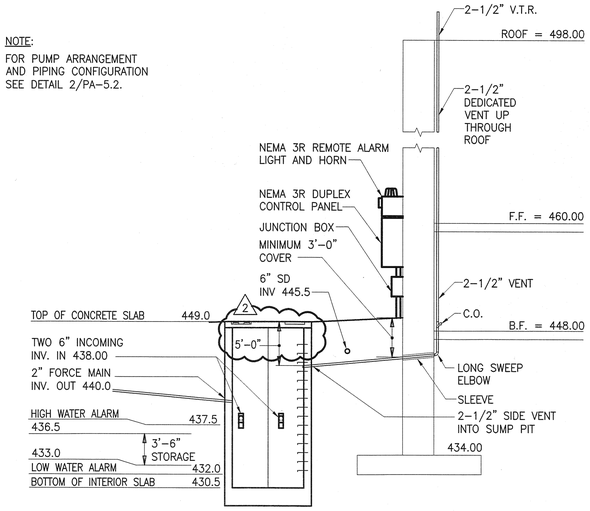


NOTE: SANITARY PUMP STATION IS SCHEDULED TO BE INSTALLED AT BEGINNING OF PROJECT. PROVIDE TEMPORARY CONTROLS, CONTROL PANEL, ALARM, SUPPORTS, WIRING ETC.. AND LOCATE NEXT TO PUMP STATION. AT CONCLUSION OF PROJECT, PROVIDE NEW CONTROL PANEL, CONTROLS, ALARMS, SUPPORTS, WIRING ETC. AT FINAL LOCATION INDICATED.

2 REMOVE EXISTING SANITARY PUMP STATION AND TURN OVER GRINDER PUMPS AND FLOATS TO HARFORD COUNTY FOR SALVAGE. SEE CIVIL DRAWINGS FOR LOCATION OF EXISTING SANITARY PUMP STATION.

## 1 SANITARY PUMP STATION PROFILE

SCALE: 1/8"=1'-0"

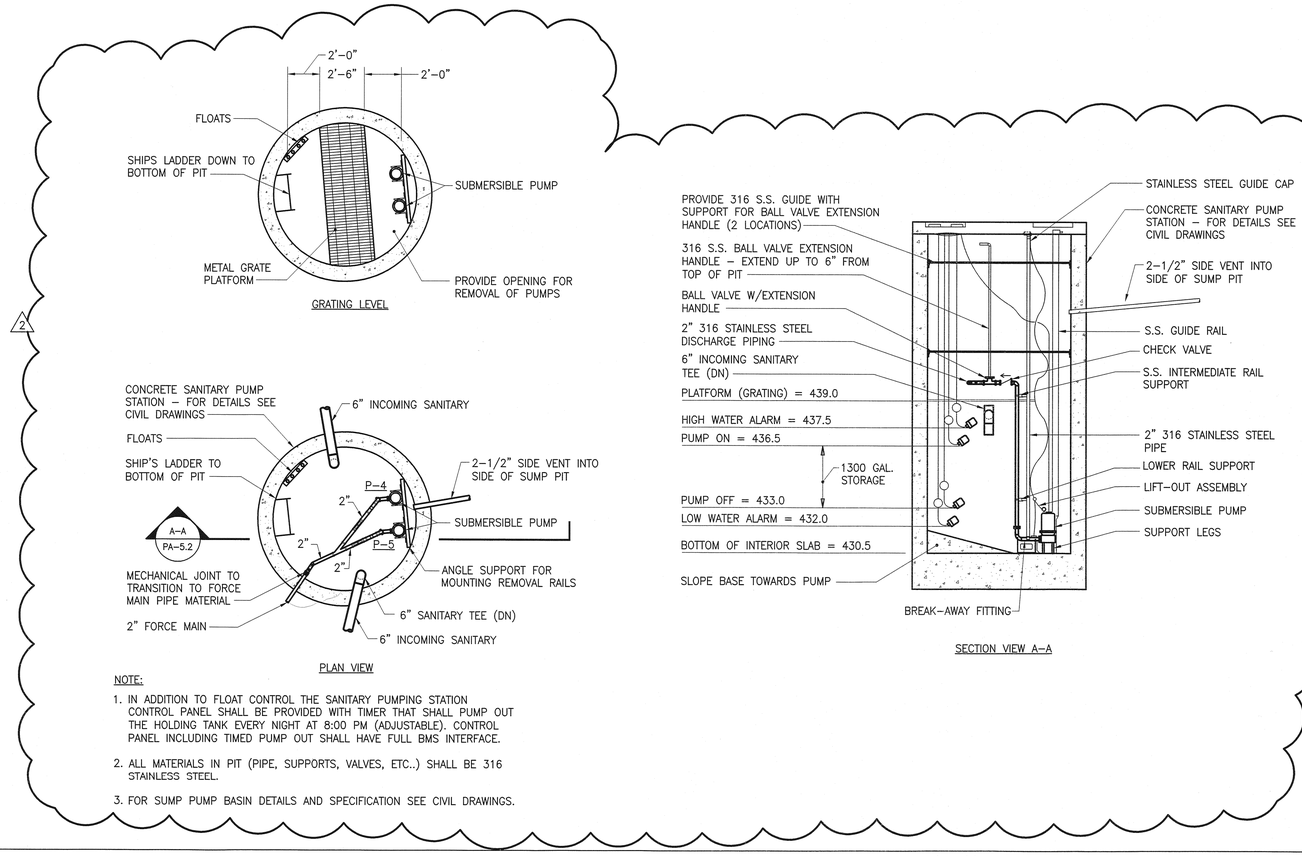


NOTE:
1. IN ADDITION TO FLOAT CONTROL THE SANITARY PUMPING STATION CONTROL PANEL SHALL BE PROVIDED WITH TIMER THAT SHALL PUMP OUT THE HOLDING TANK EVERY NIGHT AT 8:00 PM (ADJUSTABLE). CONTROL PANEL INCLUDING TIMED PUMP OUT SHALL HAVE FULL BMS INTERFACE.
2. ALL MATERIALS IN PIT (PIPE, SUPPORTS, VALVES, ETC..) SHALL BE 316 STAINLESS STEEL.
3. FOR SUMP PUMP BASIN DETAILS AND SPECIFICATION SEE CIVIL DRAWINGS.

## 2 SANITARY PUMP STATION PIPING DETAIL

SCALE: 1/4"=1'-0"

NOTES:
1. GRATING SHALL BE 316 STAINLESS STEEL, BAR TYPE, WITH 1/2" x 3/16" MINIMUM BEARING BARS AT 1-3/16" MINIMUM SPACING AND CROSS BARS AT 4" SPACING.
2. ANCHOR CURVED ANGLES TO BASIN WALL WITH 3/4"DIA. HILTI KWIK BOLT TZ EXPANSION ANCHORS (STAINLESS STEEL); PROVIDE SIX (6) ANCHORS PER ANGLE – (2) ANCHORS @ EACH END OF ANGLE AND SPACE THE REMAINING (2) AT 8" SPACING (6" MIN. EMB.).

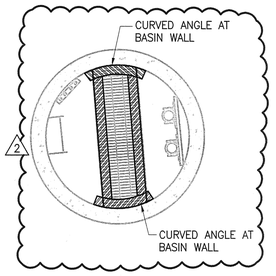


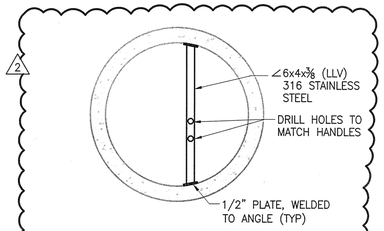


BALL VALVE EXTENSION HANDLE SUPPORT DETAIL

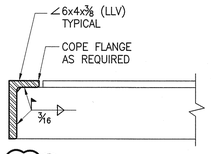


NOTE:
ALL ANGLES SHALL BE 316 STAINLESS STEEL

TYPICAL WELDED ANGLE TO ANGLE CONNECTION

## 3 GRATING SUPPORT DETAIL

SCALE: NONE

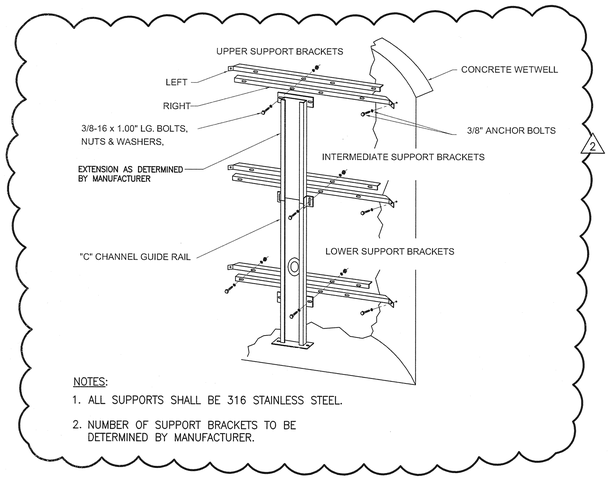


NOTES:
1. ALL SUPPORTS SHALL BE 316 STAINLESS STEEL.
2. NUMBER OF SUPPORT BRACKETS TO BE DETERMINED BY MANUFACTURER.

## 4 DUPLEX CHANNEL RAIL SYSTEM SUPPORTS

SCALE: NONE

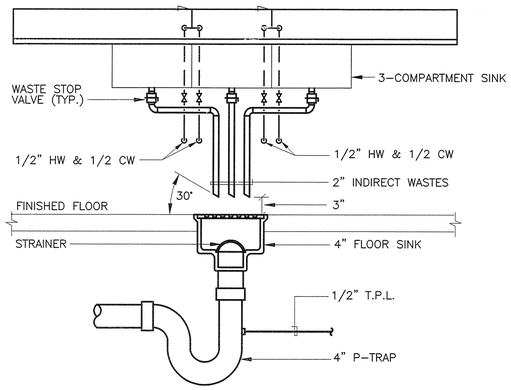


## 5 3-COMPARTMENT SINK PIPING DETAIL

SCALE: NONE


EDMEADES & STROMDAHL, LTD.
11 North Main Street
Bel Air, Maryland 21014
Phone: 410.879.0388
Fax: 410.879.4785
E-mail: lhyde@eslarch.com


STROMDAHL


Gipe Associates Inc.
Consulting Engineers
849 Fairmount Ave. Suite 102
Baltimore, Maryland 21286
P. (410)832-2420
F. (410)832-2418
Easton, Maryland
W.O.# 06095


PLUMBING DETAILS - PHASE I

HARFORD COUNTY E.O.C.
PHASE 1 COMMUNICATIONS BUILDING
2220 ADY ROAD
FOREST HILL, MD 21050


COPYRIGHTED EDMEADES & STROMDAHL LTD. 2008


Job No: 07033

Date: DEC. 18, 2012

Rev:
2 2/15/13-ADD #2

BID DOCUMENTS

Sheet No.
PA-5.2

EDMEADES

## PUMP SCHEDULE

| NO. | SERVICE | GPM | FT. OF HEAD | HP | RPM | ELECT. CHAR. V/ø/Hz | REMARKS | BASED ON |
|---|---|---|---|---|---|---|---|---|
| 1 | DOMESTIC HOT WATER RETURN (120°F) | 15 | 45 | 1.0 | 1750 | 120/1/60 | IN-LINE PUMP | TACO MODEL #KV1507 |
| 2 | DOMESTIC HOT WATER RETURN (140°F) | 10 | 35 | 1/2 | 1750 | 120/1/60 | IN-LINE PUMP | TACO MODEL #1615 |
| 3 | HEAT PUMP WATER RECIRCULATION | 35 | 25 | 1.0 | 1750 | 120/1/60 | IN-LINE PUMP | TACO MODEL #KV1506 |
| 4 | SANITARY PUMP STATION | 39 | 72 | 3.0 | 3450 | 208/1/60 | SUBMERSIBLE GRINDER PUMP | BARNES MODEL #SGV |
| 5 | SANITARY PUMP STATION | 39 | 72 | 3.0 | 3450 | 208/1/60 | SUBMERSIBLE GRINDER PUMP | BARNES MODEL #SGV |

2

## DOMESTIC WATER HEATER SCHEDULE

| NO. | LOCATION | TYPE | STORAGE CAPACITY | RECOVERY RATE @ 100 DEG RISE | KW | VOLTAGE | BASED ON: |
|---|---|---|---|---|---|---|---|
| WH-1 | MECH RM-009 | ELECTRIC | 119 GAL. | 49 GPH | 12.0 | 460/3/60 | A.O. SMITH MODEL#DEN-120 |

NOTE:

## DOMESTIC WATER EXPANSION TANK SCHEDULE

| TANK NO. | MIN. TEMP. | MAX. TEMP. | MIN. PRESS. | MAX. PRESS. | ACCEPTANCE VOLUME | REMARKS |
|---|---|---|---|---|---|---|
| 1 | 40 | 140 | 40.0 | 80.0 | 12.0 | BASED ON TACO MODEL #PAX84 |

## PLUMBING EQUIPMENT LIST

1. THERMOSTATIC MIXING VALVE:
   HIGH-LOW THERMOSTATIC MIXING VALVE, MINIMUM FLOW 1.0 GPM, MAXIMUM DEMAND 33 GPM @ 5.0 PSI DROP, 1¼" INLET, 1¼" OUTLET, BASED ON "LEONARD" HI-LO VALVE MODEL NO. TM-920.

2. HOT WATER STORAGE TANK:
   GLASS-LINED HOT WATER STORAGE TANK; 350 GALLONS OF STORAGE; 150 PSI ASME WORKING PRESSURE; W/HIGH DENSITY FIBER GLASS INSULATION; HANDHOLE CLEANOUT; CATHODIC PROTECTION; 42" (DIA.) X 100" (H) BASED ON "A.O. SMITH" MODEL NO. TJV-350.

   NOTE: DUE TO THE MECHANICAL ROOM NOT HAVING AN EXTERIOR DOOR, STORAGE TANK SIZE SHALL BE SUCH THAT TANK ACCESS INTO AND OUT OF MECHANICAL ROOM CAN BE BY WAY OF CORRIDOR.

## PLUMBING FIXTURE SCHEDULE

| NO. | FIXTURE | CW | HW | WASTE | VENT | REMARKS |
|---|---|---|---|---|---|---|
| P-1M | WATER CLOSET | 1" | – | 4" | 2" | 1.6 GPF. |
| P-1MA | WATER CLOSET | 1" | – | 4" | 2" | HANDICAPPED 1.6 GPF. |
| P-1W | WATER CLOSET | 1" | – | 4" | 2" | DUAL FLUSH |
| P-1WA | WATER CLOSET | 1" | – | 4" | 2" | HANDICAPPED DUAL FLUSH |
| P-2 | URINAL | 1" | – | 2" | 2" | 1 PT. PER FLUSH |
| P-2A | URINAL | 1" | – | 2" | 2" | HANDICAPPED 1 PT. PER FLUSH |
| P-3 | LAVATORY | 1/2" | 1/2" | 1 1/2" | 1 1/2" | COUNTER MOUNTED |
| P-3A | LAVATORY | 1/2" | 1/2" | 1 1/2" | 1 1/2" | COUNTER MOUNTED |
| P-3B | LAVATORY | 1/2" | 1/2" | 1 1/2" | 1 1/2" | WALL MOUNTED |
| P-3C | LAVATORY | 1/2" | 1/2" | 1 1/2" | 1 1/2" | WALL MOUNTED |
| P-4 | MOP SINK | 1/2" | 1/2" | 1 1/2" | 1 1/2" | – |
| P-4A | LAUNDRY TUB | 1/2" | 1/2" | 1 1/2" | 1 1/2" | – |
| P-5 | DELETED | -- | -- | -- | -- | – |
| P-6 | KITCHEN SINK | 1/2" | 1/2" | 2" | 1 1/2" | COUNTER TOP/MOUNTED |
| P-6A | KITCHEN SINK | 1/2" | 1/2" | 2" | 1 1/2" | TWO-COMP SINK COUNTER-MOUNTED |
| P-6B | HAND SINK | 1/2" | 1/2" | 2" | 1 1/2" | WALL-MOUNTED |
| P-6C | KITCHEN SINK | 1/2" | 1/2" | 2" | 1 1/2" | THREE-COMPARTMENT SINK |
| P-6D | KITCHEN SINK | 1/2" | 1/2" | 2" | 1 1/2" | – |
| P-6E | KITCHEN SINK | 1/2" | 1/2" | 2" | 1 1/2" | TWO-COMP SINK W/GARBAGE DISPOSAL |
| * P-7 | SHOWER | 1/2" | 1/2" | 2" | 1 1/2" | ADA ENCLOSURE – UNDER ANOTHER DIVISION |
| * P-7A | SHOWER | 1/2" | 1/2" | 2" | 1 1/2" | ENCLOSURE UNDER ANOTHER DIVISION |
| P-8 | --- | -- | -- | -- | -- | NOT USED |
| P-9 | DISHWASHER | -- | 1/2" | 2" | 1 1/2" | – |
| P-10 | WASHING MACHINE | 1/2" | 1/2" | 2" | 1 1/2" | – |

NOTES:
* LOW FLOW 1.5 GPM.

## CENTRAL VACUUM SYSTEM SCHEDULE

| NO. | LOCATION | VOLUME (SCFM) | VACUUM (IN. Hg) | MOTOR HP | ELECT. CHAR. V/ø/Hz | REMARKS |
|---|---|---|---|---|---|---|
| VAC-1 | MECH ROOM – 009 | 175 | 6.9 | 7.5 | 460/3/60 | BASED ON SPENCER INDUSTRAVAC SERIES 'A' MODEL #SA-607A |

NOTES:
1. SYSTEM DESIGN IS BASED ON A TWO-OPERATOR SYSTEM WITH A MAXIMUM 37.5' LONG CLEANING HOSE.

## WATER-TO-WATER GEOTHERMAL HEAT PUMP SCHEDULE

| NO. | SERVICE | SOURCE SIDE EWT (°F) | SOURCE SIDE LWT (°F) | SOURCE SIDE FLOW (GPM) | SOURCE SIDE MAX. P.D. (FT. H2O) | SOURCE SIDE HEAT OF EXTRACTION (MBH) | LOAD SIDE EWT (°F) | LOAD SIDE LWT (°F) | LOAD SIDE FLOW (GPM) | LOAD SIDE MAX. P.D. (FT. H2O) | LOAD SIDE TOTAL CAPACITY (MBH) | FLUID TYPE | COP | KW | ELECT. CHAR. V/ø/Hz | COMPRESSOR RLA | COMPRESSOR LRA | TOTAL UNIT FLA | MIN CKT AMP | MAX FUSE | MAX CKT BRK | BASED ON: |
|---|---|---|---|---|---|---|---|---|---|---|---|---|---|---|---|---|---|---|---|---|---|---|
| 1 | DOMESTIC WATER HEATING | 40 | 35.3 | 7.0 | 10.4 | 16.5 | 110 | 117.1 | 7.0 | 9.9 | 25.0 | WATER | 2.9 | 2.5 | 480/3/60 | 4.5 | 27 | 4.5 | 5.6 | 35 | 19 | WATER FURNACE ENVISION MODEL #NSW025 |
| 1 | DOMESTIC WATER HEATING | 40 | 35.3 | 7.0 | 10.4 | 16.5 | 110 | 117.1 | 7.0 | 9.9 | 25.0 | WATER | 2.9 | 2.5 | 480/3/60 | 4.5 | 27 | 4.5 | 5.6 | 35 | 19 | WATER FURNACE ENVISION MODEL #NSW025 |

NOTES:
1. REFRIGERANT TO BE R-410A.
2. PROVIDE HOSE KIT TO HEAT PUMP UNIT BASED ON PIPE SIZE, NOT UNIT CONNECTION SIZES.
3. UNIT SHALL BE FOR HEATING ONLY.
4. CONDENSER SIDE HEAT EXCHANGER SHALL BE DOUBLE-WALL VENTED BRAZED PLATE.
5. UNITS SHALL HAVE DOUBLE WALL HEAT EXCHANGER FOR DOMESTIC WATER APPLICATION.


EDMEADES & STROMDAHL, LTD.
11 North Main Street
Phone: 410.879.0388
E-mail: lhyde@eslarch.com
Bel Air, Maryland 21014
Fax: 410.879.4785


STROMDAHL


Gipe Associates Inc.
Consulting Engineers
849 Fairmount Ave. Suite 102
Baltimore, Maryland 21286
P (410)832-2420
F (410)832-2418
Easton, Maryland
W.O.# 08095


PLUMBING SCHEDULES

HARFORD COUNTY E.O.C.
PHASE 1 COMMUNICATIONS BUILDING
2220 ADY ROAD
FOREST HILL, MD 21050

COPYRIGHTED EDMEADES & STROMDAHL, LTD. 2008

Job No: 07033

Date: DEC. 18, 2012

Rev:
2 2/15/13-ADD #2

BID DOCUMENTS

Sheet No.
PA-9.1

EDMEADES

# FIRE PROTECTION GENERAL NOTES:

1. THE FIRE PROTECTION SYSTEM SHALL BE A HYDRAULICALLY DESIGNED WET AND DRY PIPE SYSTEMS, DESIGNED AND INSTALLED BY THE SPRINKLER CONTRACTOR IN ACCORDANCE WITH NFPA 13. THE SPRINKLER SYSTEM SHALL BE COMPLETE AND SHALL INCLUDE ALL PIPING, FITTINGS, VALVES, SPRINKLER HEADS, HANGERS AND SUPPORTS, ALARMS AS WELL AS MISCELLANEOUS ITEMS SUCH AS SIGNS, VALVE TAGS AND ALL OTHER RELATED EQUIPMENT, APPARATUS AND MATERIAL ITEMS NECESSARY FOR SATISFACTORY OPERATION OF THE SYSTEM.
2. THE FIRE PROTECTION DRAWINGS ARE DIAGRAMMATIC FOR THE PURPOSE OF ILLUSTRATING DESIGN INTENT AND MINIMUM PROJECT REQUIREMENTS. FINAL LOCATION, SIZING AND QUANTITY OF ALL PIPING, VALVES AND SPRINKLER HEADS SHALL BE DETERMINED AND DESIGNED BY THE SPRINKLER CONTRACTOR.
3. SPRINKLER HEADS SHALL BE LOCATED IN CEILING GRID IN A SYMMETRICAL PATTERN, COORDINATED WITH OTHER DEVICES MOUNTED IN OR ON THE CEILING. PROVIDE ADDITIONAL SPRINKLER HEADS REQUIRED TO ACHIEVE SYMMETRY. LOCATE SPRINKLER HEADS IN THE CENTER OF CEILING TILES.
4. SPRINKLER CONTRACTOR SHALL PROVIDE A COORDINATED REFLECTED CEILING PLAN AS PART OF THE SUBMITTAL TO THE ARCHITECT AND ENGINEER SHOWING SPRINKLER HEAD LOCATIONS COORDINATED WITH CEILING AND ALL OBJECTS MOUNTED IN OR ON THE CEILING.
5. THE SPRINKLER CONTRACTOR SHALL BE A LICENSED, AUTHORIZED INSTALLER OF COMMERCIAL SPRINKLER SYSTEMS AND SHALL HAVE HAD A MINIMUM OF THREE (3) YEARS OF EXPERIENCE IN THE INSTALLATION OF SPRINKLER SYSTEMS.
6. THE CONTRACTOR IS RESPONSIBLE FOR THE COMPLETE DESIGN OF THE SPRINKLER SYSTEM. THE SPRINKLER SYSTEM SHALL BE:
   - A. A DESIGNED SYSTEM IN ACCORDANCE WITH THE STANDARDS OF THE NATIONAL FIRE PROTECTION ASSOCIATION (NFPA), CHAPTERS 13, AND SPECIFICATIONS.
   - B. DESIGNED TO CONFORM WITH BUILDING STRUCTURAL, MECHANICAL AND ELECTRICAL SYSTEMS, AS INDICATED AND DESCRIBED ON THE CONTRACT DOCUMENTS.
   - C. ACCEPTABLE TO THE FIRE MARSHAL AND/OR ALL LOCAL AUTHORITIES HAVING JURISDICTION.
7. THE SPECIFICATIONS, THE CONTRACTOR SHALL SUBMIT FOR APPROVAL TO THE AUTHORITIES HAVING JURISDICTION, FULLY COORDINATED SHOP DRAWINGS, CAPACITY DATA, HYDRAULIC CALCULATIONS AND CATALOG CUTS OF PIPE, FITTINGS, SPRINKLER HEADS, HANGERS AND SUPPORTS, VALVES, SPRINKLER AND PIPING LAYOUT. DESIGN PLAN AND CALCULATIONS SHALL BE PREPARED AND SIGNED/SEALED BY A REGISTERED FIRE PROTECTION ENGINEER IN ACCORDANCE WITH UFC REQUIREMENTS.
8. THE SPRINKLER SYSTEM SHALL BE INSPECTED AND TESTED IN ACCORDANCE WITH THE REQUIREMENTS OF THE NATIONAL FIRE PROTECTION CODE, AND ALL LOCAL AUTHORITIES HAVING JURISDICTION.
9. THE CONTRACTOR SHALL ARRANGE FOR INSPECTION AND TESTS OF ANY OR ALL PARTS OF THE WORK AS REQUIRED BY AUTHORITIES HAVING JURISDICTION AND PAY ALL CHARGES FOR SAME.
10. ALL SIZES AND CRITERIA ARE MINIMUM REQUIREMENTS. ALL EQUIPMENT, PIPES, ETC. SHALL BE SIZED BY THE SPRINKLER CONTRACTOR.
11. CONTRACTOR SHALL BE RESPONSIBLE FOR OBTAINING ACCURATE FLOW TEST DATA OR PERFORMING AN UPDATED FLOW TEST, WHICHEVER IS REQUIRED.
12. SPRINKLER DRAINS SHALL DISCHARGE TO THE EXTERIOR OF THE BUILDING, IN A LOCATION THAT WILL NOT BE A NUISANCE OR CREATE A WET WALKING SURFACE.
13. AREA SHALL BE DESIGNED IN ACCORDANCE WITH THE REQUIREMENTS FOR LIGHT HAZARD OCCUPANCY PER NFPA 13.
14. AUTOMATIC SPRINKLER HYDRAULIC DESIGN REQUIREMENTS: (BASED ON UFC)
   - LIGHT HAZARD AREAS SHALL BE HYDRAULICALLY DESIGNED BASED ON .10 GPM/SF OVER THE MOST REMOTE 3000 SF. MAXIMUM SPRINKLER HEAD SPACING SHALL BE 225 SF. HOSE STREAM ALLOWANCE SHALL BE 250 GPM (COMBINED INSIDE AND OUTSIDE) APPLIED AT THE SOURCE PER NFPA 13.
15. PAINT NEW SPRINKLER PIPING RED AND LABEL PER NFPA 13.
16. ALL FIRE PROTECTION VALVES SHALL BE SUPERVISED.
17. PROVIDE DOUBLE INTERLOCK PRE-ACTION FIRE PROTECTION SYSTEM WHERE INDICATED.
18. FOR FIRE STOPPING DETAILS SEE MECHANICAL DRAWINGS AND SPECIFICATIONS.
19. FOR ALL DATA ROOM SPACES AND SPACES THAT CONTAIN A RAISED FLOOR, AN AUTOMATIC SPRINKLER SYSTEM SHALL BE PROVIDED TO SERVE BOTH THE SPACE AND AREA BELOW THE RAISED FLOOR.

2

## FIRE PUMP SCHEDULE

| ID NO. | LOCATION | SERVICE | TYPE | GPM | FT./ HEAD | H.P. | RPM | CONTROLLER | ELECTRIC | MANUFACTURER |
|---|---|---|---|---|---|---|---|---|---|---|
| FP-1 | FIRE PUMP ROOM | FIRE PROTECTION | HORIZONTAL SPLITCASE | 500 | 115 | 25 | 1760 | PACKAGED | 460/3Ø | BASED ON: PEERLESS MODEL No. 4AEF11 |
| JP-1 | FIRE PUMP ROOM | FIRE PROTECTION | IN-LINE | 6.0 | 115 | 3/4 | 3450 | PACKAGED | 460/3Ø | BASED ON: CRANE MODEL No. 37CT7M |

NOTES:
1. PROVIDE FIRE PUMP AND JOCKEY PUMP AS PACKAGED UNIT MOUNTED ON SKID WITH CONTROLLERS, PIPING AND VALVES.

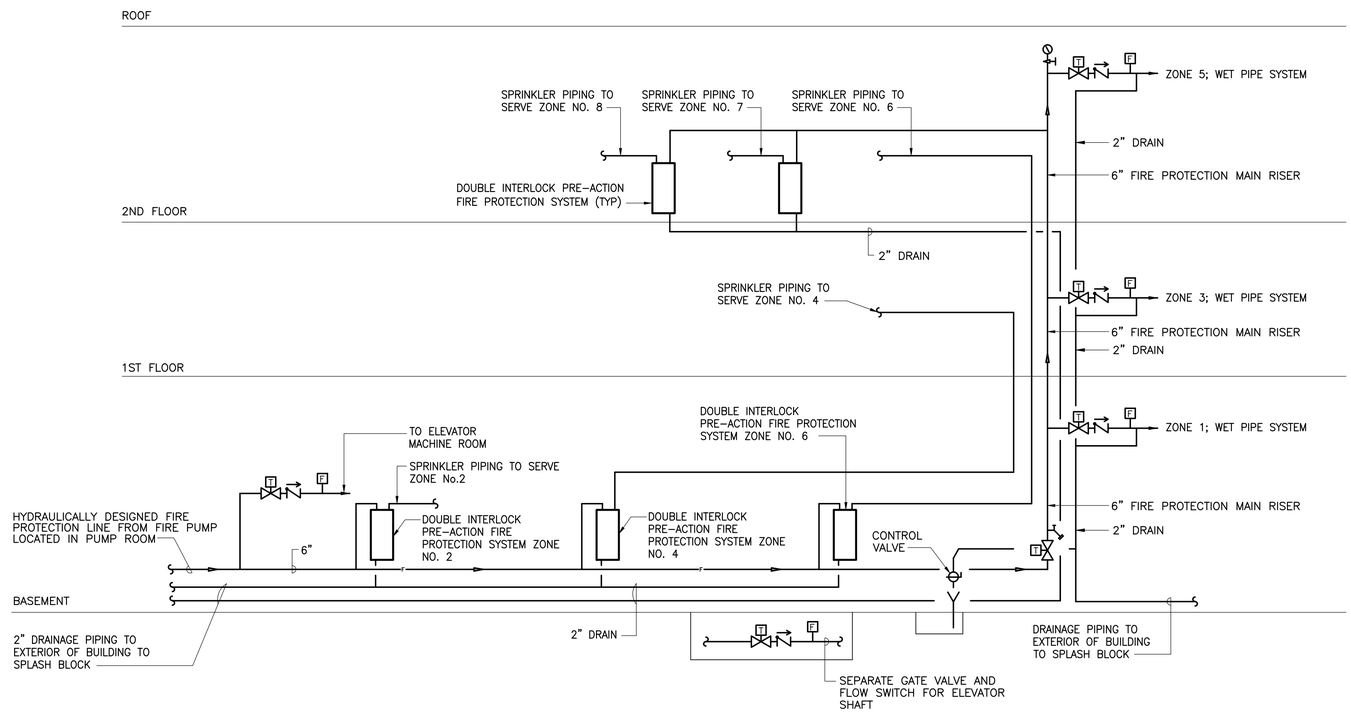


## FIRE PROTECTION RISER DIAGRAM

SCALE: NONE

## FACILITY ZONING PHASE I:

| ZONE No.: | LOCATIONS: |
|---|---|
| ZONE No.1 | E.O.C. BUILDING GROUND FLOOR |
| ZONE No.2 | E.O.C. BUILDING GROUND FLOOR – PROVIDE PRE-ACTION SYSTEM FOR UPS ROOM – 002 |
| ZONE No.3 | E.O.C. BUILDING FIRST FLOOR |
| ZONE No.4 | E.O.C. BUILDING FIRST FLOOR – PROVIDE PRE-ACTION SYSTEM FOR EMERGENCY OPERATIONS CENTER – 151 AND COMPUTER CONTROL ROOM – 167 |
| ZONE No.5 | E.O.C. BUILDING SECOND FLOOR |
| ZONE No.6 | E.O.C. BUILDING SECOND FLOOR – PROVIDE PRE-ACTION SYSTEM FOR DISPATCH ROOM – 220 |
| ZONE No.7 | E.O.C. BUILDING SECOND FLOOR – PROVIDE PRE-ACTION SYSTEM FOR TELEPHONE SERVER ROOM – 226; DATA SERVER ROOM – 225 & RAISED FLOOR LOCATED UNDER CORRIDOR BETWEEN RMS 225 & 218 |
| ZONE No.8 | E.O.C. BUILDING SECOND FLOOR – PROVIDE PRE-ACTION SYSTEM FOR TRANSMITTER ROOM – 218 & M/E RM – 217 |

2

## FIRE PROTECTION LEGEND

| SYMBOL | ABBREVIATION | DEFINITION |
|---|---|---|
| —F— | F | FIRE LINE |
| —SP— | SP | SPRINKLER LINE |
| T | | OS&Y ZONE CONTROL VALVE WITH TAMPER SWITCH |
| | | CHECK VALVE |
| F | | FLOW SWITCH |
| | NFPA | NATIONAL FIRE PROTECTION ASSOCIATION |
| | PSI | POUNDS PER SQUARE INCH |
| | TYP. | TYPICAL |
| | | BACKFLOW PREVENTER |
| | | |
| | | |
| | | |


EDMEADES & STROMDAHL, LTD.
11 North Main Street
Phone: 410.879.0388
E-mail: lhyde@eslarch.com
Bel Air, Maryland 21014
Fax: 410.879.4785


FIRE PROTECTION GENERAL NOTES, LEGEND AND DETAILS

HARFORD COUNTY E.O.C.
PHASE 1 COMMUNICATIONS BUILDING
2220 ADY ROAD
FOREST HILL, MD 21050

COPYRIGHTED EDMEADES & STROMDAHL, LTD. 2008

Job No: 07033

Date: DEC. 18, 2012

Rev:

2 2/15/13–ADD #2

BID DOCUMENTS

Sheet No.
FA-7.0

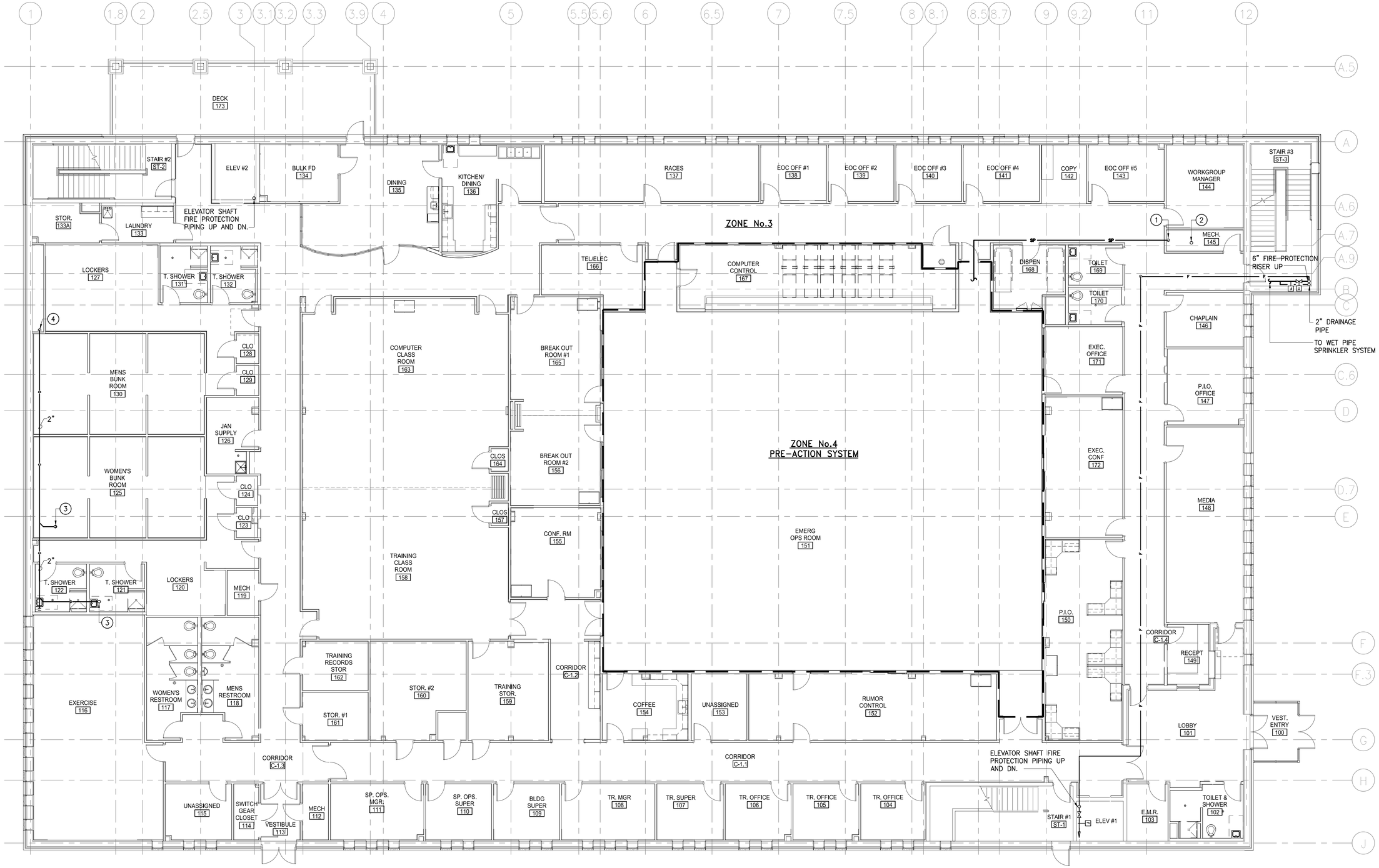


## DRAWING NOTES:

2

1. SPRINKLER PIPING FROM DOUBLE-INTERLOCK PRE-ACTION SYSTEM LOCATED IN GROUND FLOOR MECHANICAL ROOM SERVING ZONE NO. 4. PRE-ACTION SYSTEM TO SERVE BOTH THE SPACE AND AREA BELOW RAISED FLOOR IN ZONE NO.4. FOR CONTINUATION SEE DRAWING FA-7.1.
2. SPRINKLER PIPING FROM DOUBLE-INTERLOCK PRE-ACTION SYSTEM LOCATED IN GROUND FLOOR MECHANICAL ROOM SERVING ZONE NO. 6 UP TO SECOND FLOOR. FOR CONTINUATION SEE DRAWING FA-7.3.
3. 2" DRAIN PIPE UP PRE-ACTION SYSTEM. FOR CONTINUATION SEE DRAWING FA7.3.
4. 2" DRAIN PIPE DN. FOR CONTINUATION SEE DRAWING FA7.1.

## FIRST FLOOR PLAN E.O.C. BLDG. – FIRE PROTECTION PHASE I

SCALE: 1/8" = 1'-0"

SCALE: 1/8" = 1'-0"

8 0 8 16

KEY PLAN

SCALE: NONE

EDMEADES & STROMDAHL, LTD.
11 North Main Street
Phone: 410.879.0388
E-mail: lhyde@eslarch.com
Bel Air, Maryland 21014
Fax: 410.879.4785

Gipe Associates Inc.
Consulting Engineers
849 Fairmount Ave. Suite 102
Baltimore, Maryland 21286
P. (410)832-2420
F. (410)832-2418
Easton, Maryland
W.O.# 06095

FIRE PROTECTION PLAN COMM. BLDG. FIRE PROTECTION

HARFORD COUNTY E.O.C.
PHASE 1 COMMUNICATIONS BUILDING
2220 ADY ROAD
FOREST HILL, MD 21050

COPYRIGHTED EDMEADES & STROMDAHL, LTD. 2008

Job No: 07033

Date: DEC. 18, 2012

Rev:

2 2/15/13-ADD #2

BID DOCUMENTS

Sheet No. FA-7.2

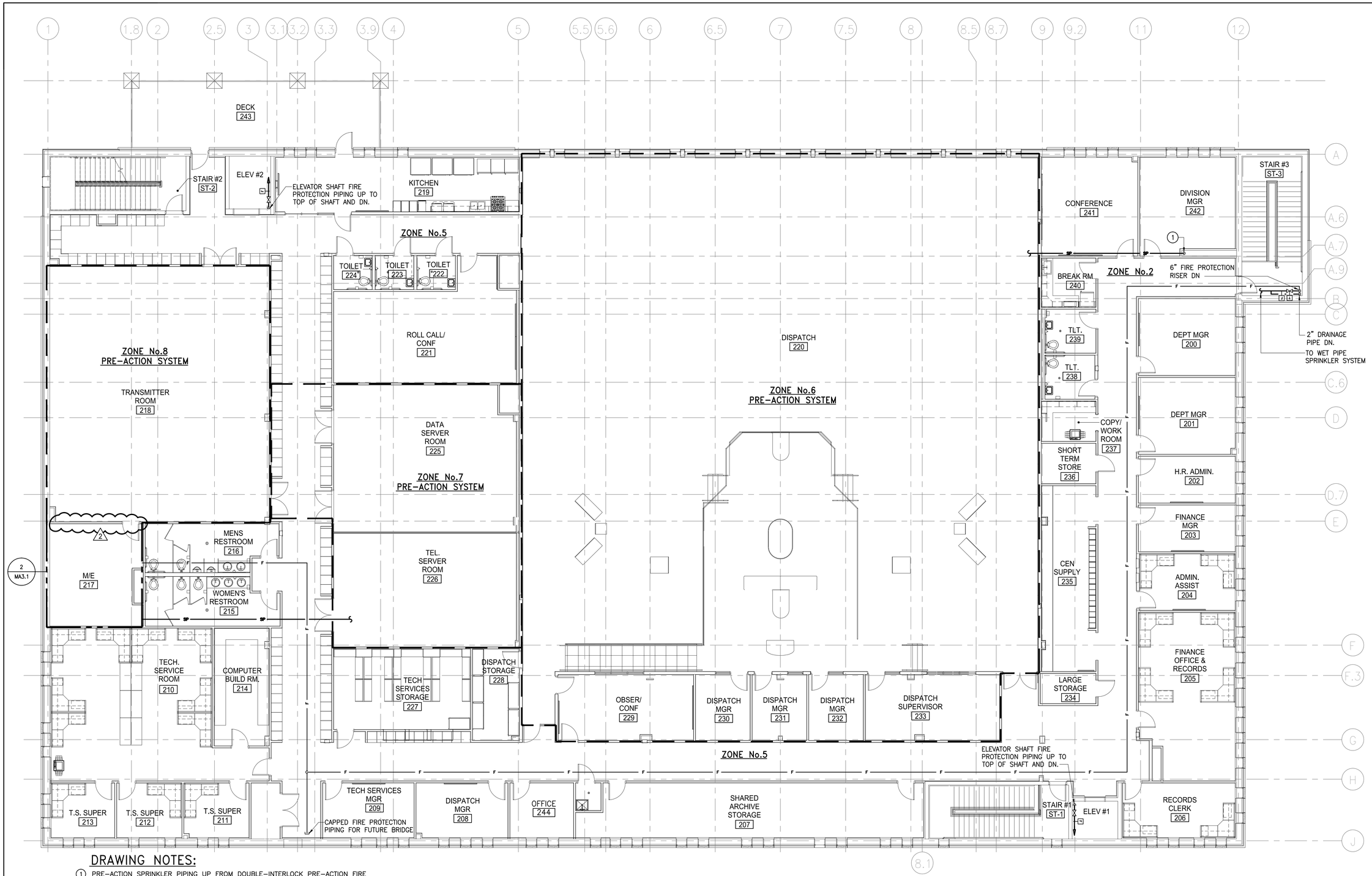


## DRAWING NOTES:

1. PRE-ACTION SPRINKLER PIPING UP FROM DOUBLE-INTERLOCK PRE-ACTION FIRE PROTECTION SYSTEM LOCATED IN THE GROUND FLOOR MECHANICAL ROOM. FOR CONTINUATION OF PIPING SEE DRAWINGS FA-7.2 AND FA-7.1.
2. PRE-ACTION SYSTEM TO SERVE BOTH THE SPACE AND AREA BELOW RAISED FLOOR IN ALL ZONES ON THIS FLOOR.

## SECOND FLOOR PLAN E.O.C. BLDG. – FIRE PROTECTION PHASE I

SCALE: 1/8" = 1'-0"

SCALE: 1/8" = 1'-0"

8 0 8 16

KEY PLAN

SCALE: NONE


EDMEADES & STROMDAHL, LTD.
11 North Main Street
Phone: 410.879.0388
E-mail: lhyde@eslarch.com
Bel Air, Maryland 21014
Fax: 410.879.4785



Gipe Associates Inc.
Consulting Engineers
849 Fairmount Ave Suite 102
Baltimore, Maryland 21286
P. (410)832-2420
F. (410)832-2418
Easton, Maryland
W.O.# 08095


SECOND FLOOR PLAN COMM. BLDG. - FIRE PROTECTION

**HARFORD COUNTY E.O.C.**
**PHASE 1 COMMUNICATIONS BUILDING**
2220 ADY ROAD
FOREST HILL, MD 21050

COPYRIGHTED EDMEADES & STROMDAHL, LTD. 2008

Job No: 07033

Date: DEC. 18, 2012

Rev:

2 2/15/13-ADD #2

BID DOCUMENTS

Sheet No. FA-7.3

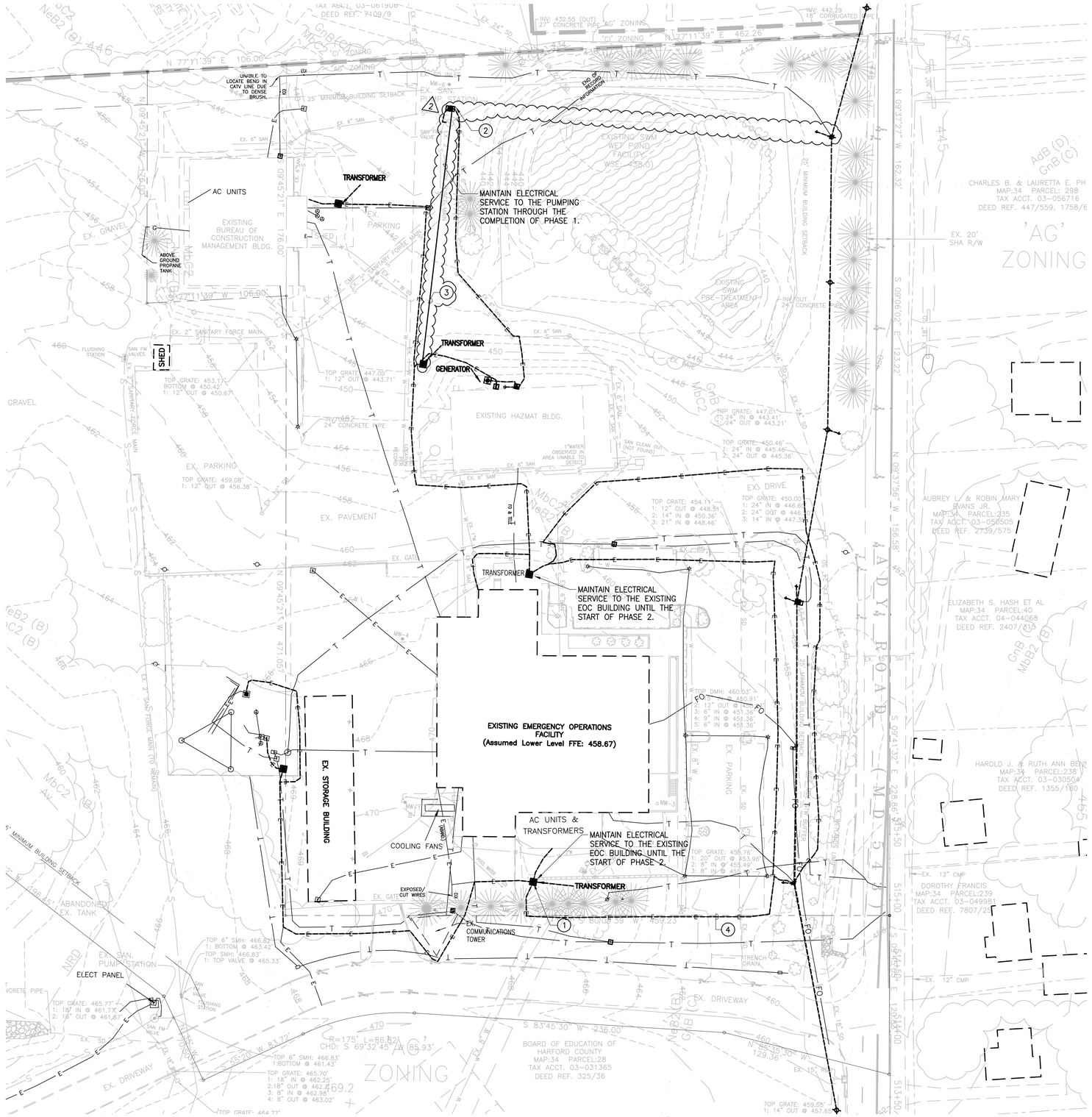


## ELECTRICAL SITE PLAN – EXISTING

SCALE: 1" = 40'-0"

## DRAWING NOTES:

1. MAINTAIN EXISTING ELECTRICAL SERVICE TO EOC BUILDING AT ALL TIMES. COORDINATE THE RELOCATION OF ANY UTILIES TO BE RELOCATED AS NECESSARY WITH OWNER.
2. MAINTAIN EXISTING ELECTRICAL SERVICE TO PUMPING STATION AT ALL TIMES. FURNISH AND INSTALL ALL TEMPORARY POWER FOR NEW PUMPING STATION PRIOR TO REMOVAL OF EXTISTING PUMPING STATION.
3. PROVIDE TEMPORARY ELECTRICAL SERVICE TO EXISTING AND NEW PUMPING STATION. REFER TO RISER FOR ADDITIONAL INFORMATION.
4. COORDINATE LOCATION OF NEW UTILITY POLES W/BGE RE-FEED THE EXISTING BUILDING AS REQUIRED. PROVIDE TEMPORARY GENERATOR FOR SWITCHOVER TO FEED ENTIRE BUILDING.

SCALE: 1" = 40'-0"

40 0 40 80

EDMEADES & STROMDAHL, LTD.
11 North Main Street
Phone: 410.879.0388
E-mail: lhyte@edarch.com
Bel Air, Maryland 21014
Fax: 410.879.4785

STROMDAHL

Gipe Associates Inc.
Consulting Engineers
848 Fairmount Ave. Suite 102
Baltimore, Maryland 21286
P. (410)832-2420
F. (410)832-2418
Easton, Maryland
W.O.# 08095

COMMUNICATONS & HAZMAT BUILDINGS
ELECTRICAL SITE PLAN - EXISTING

# HARFORD COUNTY E.O.C.
# PHASE 1 COMMUNICATIONS BUILDING

2220 ADY ROAD
FOREST HILL, MD 21050

COPYRIGHTED EDMEADES & STROMDAHL, LTD. 2008

Job No: 07033

Date: DEC. 18, 2012

Rev:

2/15/13-ADD #2

BID DOCUMENTS

Sheet No.

EAS-1

EDMEADES

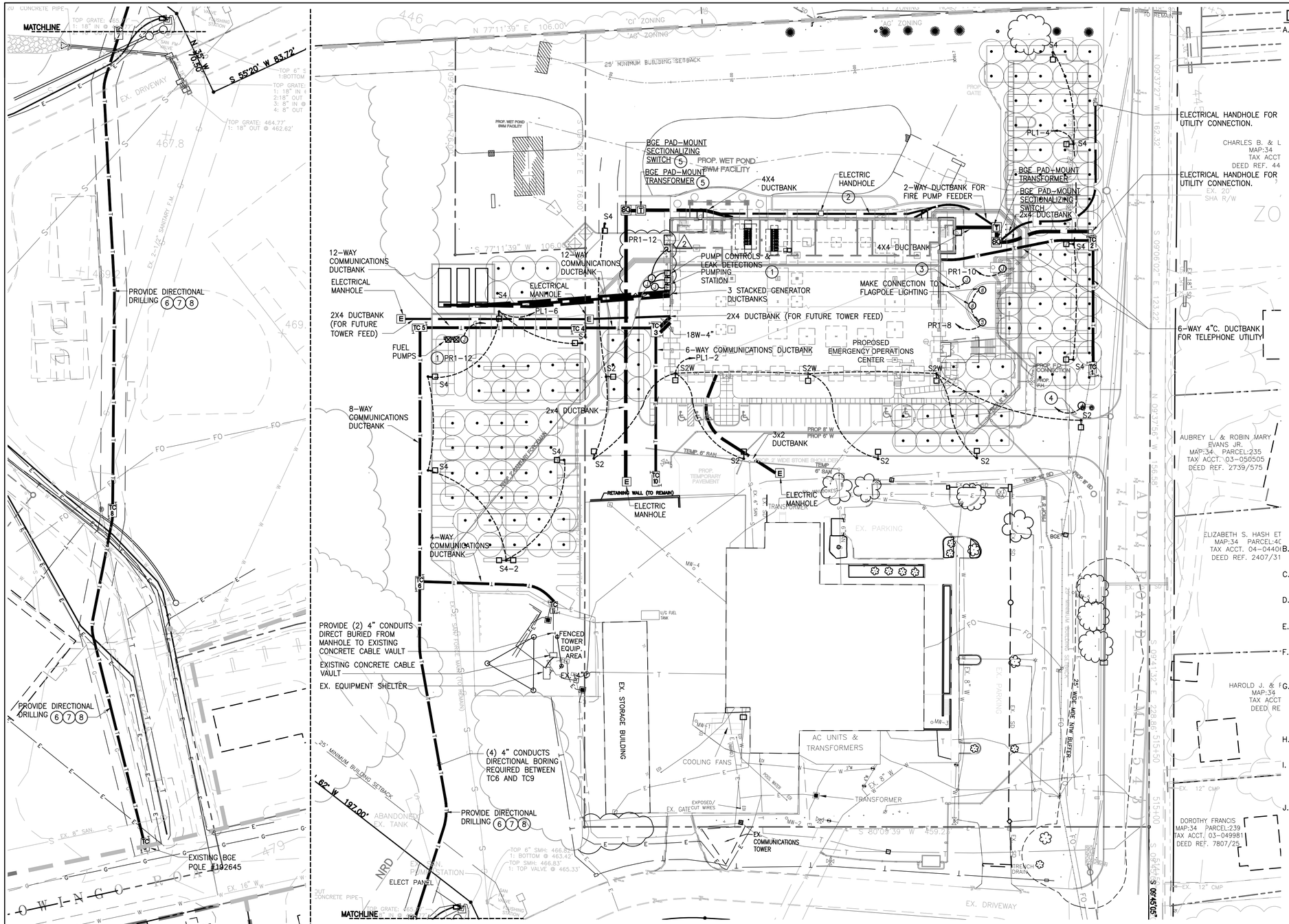


## DRAWING NOTES:

1. MAKE CONNECTIONS TO FUEL OIL LEAK DETECTION SYSTEM PANELS AND OVERFILL ALARMS AS NECESSARY. COORDINATE EXACT LOCATION IN FIELD. 2
2. PROVIDE (2)4" CONCRETE ENCASED CONDUITS WITH 30" MINIMUM COVER BETWEEN TRANSFORMER PADS.
3. PROVIDE (2)1"C WITH PULL STRING AND TRACE WIRE TO ELECTRICAL ROOM 004. LABEL "FUTURE MEMORIAL PLAZA". CAP BURIED END.
4. PROVIDE (2)1"C WITH PULL STRING AND TRACE WIRE TO ELECTRICAL ROOM 004. LABEL "FUTURE MEMORIAL PLAZA". CAP BURIED END.
5. CAP AND SEAL CONDUITS ABOVE PAD FOR FUTURE BUILDING SERVICE. PROVIDE PULL STRINGS IN ALL EMPTY CONDUITS.
6. PROVIDE (4) 4" ORANGE HPDE SDR13.50 CONDUITS, SILICON LINED, WITH PULL ROPE AND TRACER WIRE.
7. PROVIDE DUCTBANK MARKER MONUMENTS AT 100' INTERVALS AND AT EACH BEND.
8. ALL WORK BETWEEN TC6 AND TC9 SHALL BE PERFORMED BETWEEN JULY 1 AND AUGUST 15.

## ELECTRICAL SITE PLAN – ROUTING – NEW WORK

SCALE: 1" = 40'-0"

SCALE: 1" = 40'-0"

40 0 40 80

## DRAWING NOTES:

A. EXISTING INFORMATION AND CONDITIONS NOT GUARANTEED. VERIFY CONDITIONS AND TEST PIT EXISTING UTILITIES. THE CORRECTNESS AND COMPLETENESS OF THE INFORMATION SHOWING EXISTING CONDITIONS IS NOT GUARANTEED. BEFORE BEGINNING CONSTRUCTION, THE CONTRACTOR SHALL PERFORM THE FOLLOWING TASKS. (a) NOTIFY MISS UTILITY AT 1-800-257-7777, AND MAKE SURE THEY COMPLETE THE MARKING OF CONTROL MEASURES. MAINTAIN ALL MARKINGS THROUGHOUT CONSTRUCTION. THE CONTRACTOR SHALL ALSO INCLUDE IN HIS BID PRICE MARKING OF ON-SITE UTILITIES THAT MIGHT NOT BE MARKED BY MISS UTILITY; THE CONTRACTOR SHALL MARK THESE ON-SITE UTILITIES HIMSELF OR BY SUBCONTRACTOR WITH A PRIVATE ON-SITE UTILITY LOCATION COMPANY. (b) VERIFY THE GENERAL ACCURACY OF EXISTING CONDITIONS SHOWN ON THE SITE DRAWINGS BY VISUAL INSPECTION OF THE SURFACE OF THE SITE AND ALL EXISTING STRUCTURES, PAVING AND UTILITY APPURTENANCES VISIBLE THEREON; (c) WITH REGARDS TO THE STRUCTURES AND APPURTENANCES OBSERVED AS REQUIRED PER ITEM (b) ABOVE,DETERMIN THE TYPE, SIZE, LOCATION AND ELEVATION OF ALL THOSE EXISTING UTILITIES(INCLUDING BUT NOT LIMITED TO ALL WELLS, STORM DRAINS, SANITARY LINES, WATERLINES, GAS LINES, STEAM LINES, TELEPHONE LINES, AND COMMUNICATION DUCTS, AND ALL MANHOLES, INLETS, CLEAN-OUTS, HANDHOLES. ETC. RELATED THERETO) WITHIN THE LIMITS OF CONSTRUCTION IN ORDER TO (i) AVOID DAMAGING OR DISRUPTING SERVICE, AND (i) TO COORDINATE AND FACILITATE CONSTRUCTION OF PROPOSED UTILITIES AND OTHER IMPROVEMENTS. IN ADDITION TO THE CONTRACTOR'S VISUAL OBSERVATION AND THE UTILITY MARKING (AS REQUIRED ABOVE), THE CONTRACTOR SHALL SCHEDULE AND COMPLETE TEST PITTING OF ALL EXISTING UTILITIES (FOR THE PURPOSE SET FORTH ABOVE) AND SHALL DO SO IN A TIMELY MANNER IN ORDER TO ALLOW TIME FOR ANALYSIS AND REDESIGN BY GIPE AND /OR OTHER CONSULTANTS, WITH OUT DELAYING THE PROJECT SCHEDULE. (d) IMMEDIATELY REPORT TO ARCHITECT AND GIPE THE RESULTS OF STEPS (a), (b), AND (c) WHICH MIGHT INDICATE ANY DISCREPANCY BETWEEN ACTUAL CONDITIONS AND EXISTING CONDITION. TEST PITTING DEFINED: FOR THE PURPOSE OF THE CONTRACT, EXCAVATION OF UTILITY TRENCHES DOES NOT CONSTITUTE TEST PITTING. TEST PITTING IS A SEPARATE OPERATION COMPLETED AT LEAST SEVEN DAYS BEFORE UTILITY INSTALLATION IS SCHEDULED TO BEGIN. TEST PITTING MEANS EXCAVATION TO EXPOSE EXISTING UTILITIES IN TWO SITUATIONS: (i) WHERE PROPOSED IMPROVEMENTS CROSS EXISTING UTILITIES (PIPES, LINES, STRUCTURES, APPURTENANCES) AND (i) WHERE PROPOSED UTILITIES ARE DESIGNED TO CONNECT TO EXISTING UTILITIES. TEST PITTING INCLUDES RECORDING THE TYPE, SIZE, LOCATION AND ELEVATION OF THE EXPOSED UTILITIES, AND EMAILING THE RECORD TO THE ARCHITECT, GIPE AND THE OWNER. THE RECORD MAY BE A LEGIBLE HAND-WRITTEN FIELD SKETCH. COORDINATE WITH ELECTRIC, GAS, & TELECOMMUNICATIONS COMPANY=IES. IN ADDITION TO THE ABOVE REQUIREMENTS, THE CONTRACTOR SHALL COORDINATE WITH LOCAL PRIVATE UTILITY COMPANIES WHERE TEMPORARY DISCONNECTION, RELOCATION OR REMOVAL OF UTILITIES IS REQUIRED FOR THE CONTRACTOR TO CONSTRUCT THE PROPOSED BUILDINGS AND SITE IMPROVEMENTS.

B. PEDESTRIAN AND VEHICULAR TRAFFIC PATHS MUST BE MAINTAINED DURING THE ENTIRE PROJECT.

C. THE EXISTING UTILITIES SYSTEM SHALL REMAIN IN SERVICE DURING CONSTRUCTION.

D. ALL UTILITY OUTAGES OF ANY TYPE MUST BE COORDINATED WITH THE OWNER/ENGINEER.

E. UNLESS OTHERWISE INDICATED, ALL WORK ASSOCIATED WITH THE CONDUIT SYSTEM IS NEW.

F. ALL FRAMES, GRATES, COVERS, CURBS, PAVING AND TOPSOIL TOP ELEVATIONS SHALL MATCH ADJACENT EXISTING GRADES AND ELEVATIONS.

G. THE CONTRACTOR SHALL BE RESPONSIBLE FOR ALL COSTS ASSOCIATED WITH REPLACEMENT/RESTORATION OF EXISTING UTILITIES WHERE SUCH DAMAGES OCCUR DUE TO THE CONTRACTOR'S FAILURE TO LOCATE, PROTECT, AND PRESERVE SUCH UTILITIES.

H. IF REQUIRED, SHEETING AND SHORING SHALL BE PROVIDED AS NECESSARY FOR EXCAVATIONS.

I. ALL ELECTRICAL DUCTBANKS, CONDUIT SYSTEMS, PADS, VAULTS, PITS, HANDHOLES AND ALL WORK RELATED TO THE PRIMARY UTILITY SYSTEM IS TO BE TO BG&E STANDARDS AND APPROVED PRIOR TO INSTALLATION.

J. TC-1, TC-2, TC-7, TC-8 AND TC-9 ARE TO BE COMMUNICATIONS HANDHOLES. TC-3, TC-4, TC-5, TC-6, TC-10 AND TC-11 ARE TO BE TELECOMMUNICATIONS MANHOLES.


EDMEADES & STROMDAHL, LTD.
11 North Main Street
Phone: 410.879.0388
E-mail: lbyte@edstrd.com
Bel Air, Maryland 21014
Fax: 410.879.4785



Gipe Associates Inc.
Consulting Engineers
848 Fairmount Ave Suite 102
Towson, Maryland 21286
P: (410)832-2420
F: (410)832-2418
Easton, Maryland
W.O.# 08095


COMMUNICATONS & HAZMAT BUILDINGS
ELECTRICAL SITE PLAN - ROUTING - NEW WORK

# HARFORD COUNTY E.O.C.
# PHASE 1 COMMUNICATIONS BUILDING

2220 ADY ROAD
FOREST HILL, MD 21050

COPYRIGHTED EDMEADES & STROMDAHL, LTD. 2008

Job No: 07033

Date: DEC. 18, 2012

Rev:
2 2/15/13-ADD #2

BID DOCUMENTS

Sheet No. 2 EAS-2

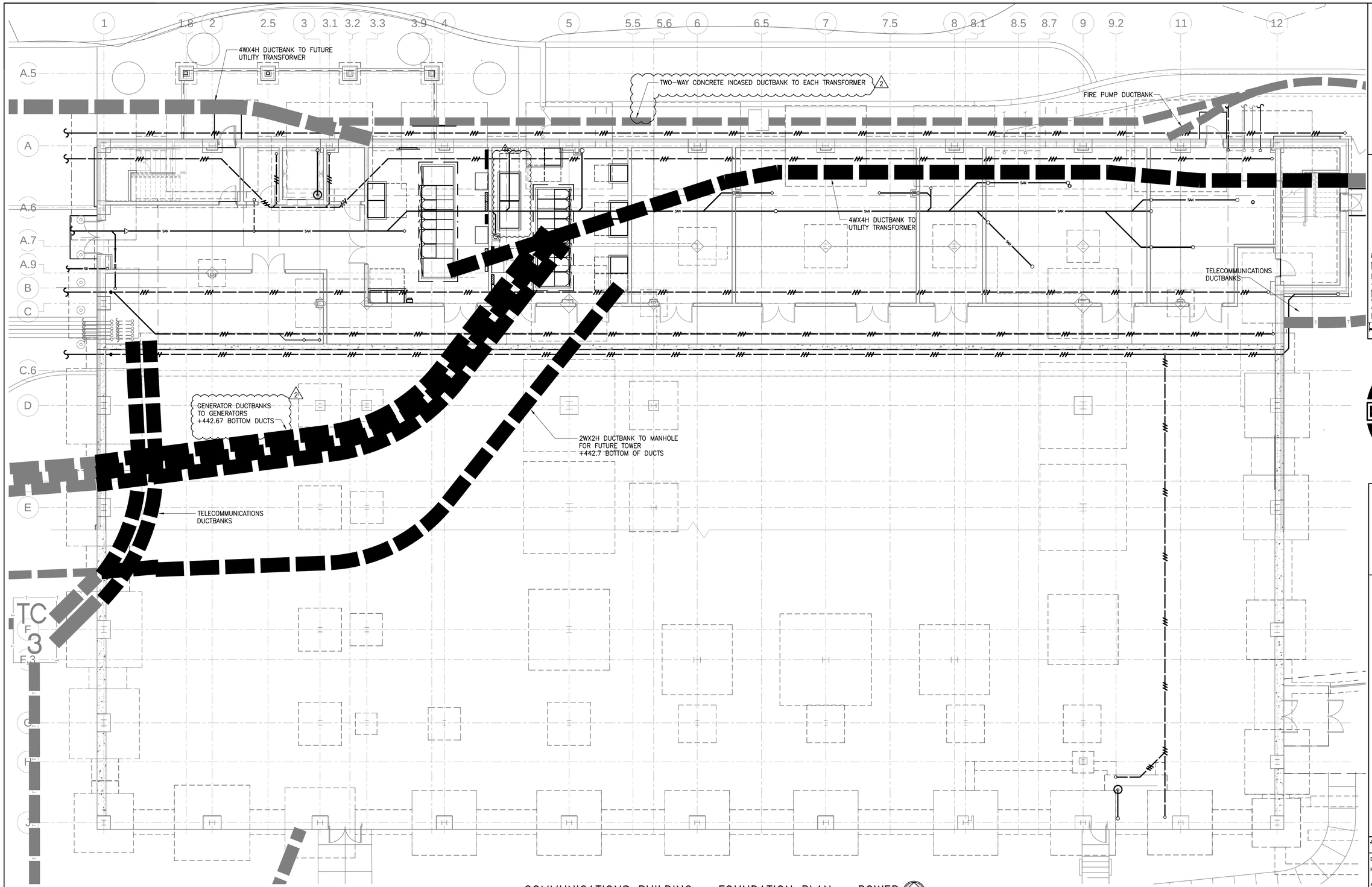


## COMMUNICATIONS BUILDING – FOUNDATION PLAN – POWER

SCALE: 1/8" = 1'-0"

NOTE: DUCTBANKS TO BE COORDINATED WITH ALL UTILITIES AND ALL FOOTINGS/COLUMNS PRIOR TO WORK BEING COMPLETED. REFER TO SPECIFICATIONS FOR SHOP DRAWING REQUIREMENTS.

SCALE: 1/8" = 1'-0"

8 0 8 16

KEY PLAN

SCALE: NONE


EDMEADES & STROMDAHL, LTD.
11 North Main Street
Phone: 410.879.0388
E-mail: lbyte@eslarch.com
Bel Air, Maryland 21014
Fax: 410.879.4785


STROMDAHL


Gipe Associates Inc.
Consulting Engineers
849 Fairmount Ave Suite 102
Towson, Maryland 21286
P (410)832-2420
F (410)832-2418
Baltimore, Maryland
W.O.# 08095


COMMUNICATION BLDG. FOUNDATION PLAN - ELECTRICAL PHASE I

# HARFORD COUNTY E.O.C. PHASE 1 COMMUNICATIONS BUILDING

2220 ADY ROAD
FOREST HILL, MD 21050

COPYRIGHTED EDMEADES & STROMDAHL LTD. 2008

Job No: 07033

Date: DEC. 18, 2012

Rev:

2 2/15/13-ADD #2

BID DOCUMENTS

Sheet No. EA-1.0

EDMEADES

## ELEVATOR MACHINE ROOM NOTES

1. ELEVATOR DISCONNECT. 3P–100A–F/SS (FUSE PER MANUFACTURERS NAMEPLATE DATA) WITH 2 N.O. AND 2 N.C. AUXILIARY CONTACTS. MAKE CONNECTION TO ELEVATOR CONTROLLER AS REQUIRED. (2)
2. 2P–30–F/SS (FUSE @ 15A) IN NEMA 1 ENCLOSURE, MAKE CONNECTION TO ELEVATOR CAB LIGHTING, FAN AND CONTROLS RESPECTIVELY AND LABEL EACH DISCONNECT FOR LOAD SERVED.
3. MOUNT 36" ABOVE PIT FLOOR. CIRCUIT AHEAD OF GFI RECEPTACLE. MOUNT LIGHT SWITCH ADJACENT TO PIT LADDER. (TYPICAL)
4. MAKE ALL REQUIRED CONNECTIONS TO SUMP PUMP CONTROLLER: 120V,1ø,1/2HP.

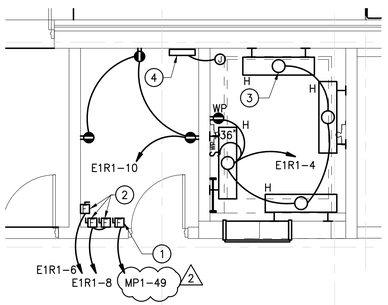


1 / E1.1 GROUND FLOOR POWER PLAN
ELEVATOR MACHINE ROOM
SCALE: 1/4" = 1'–0"

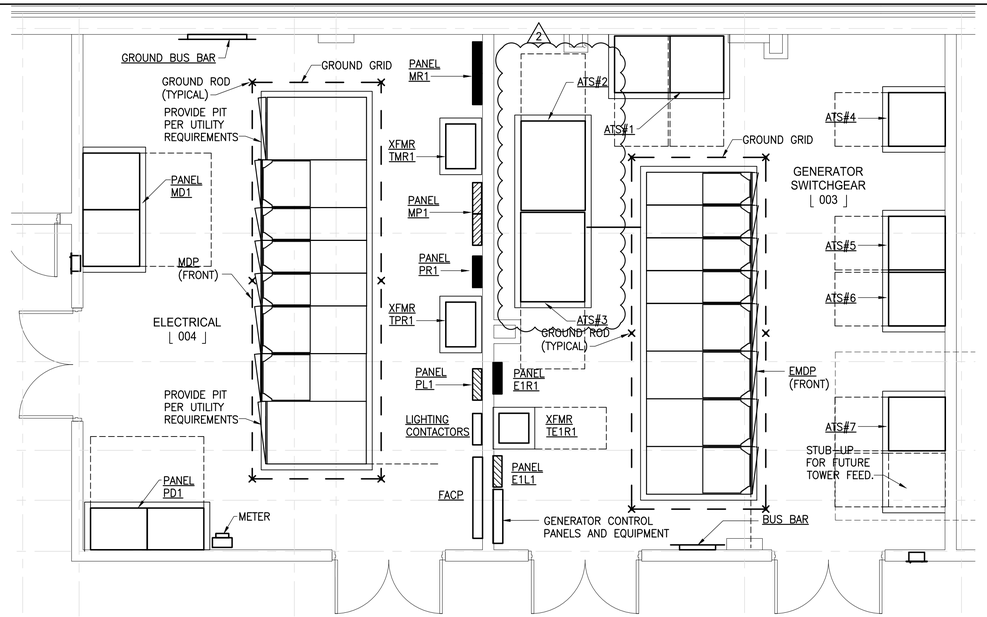


2 / E1.1 GROUND FLOOR POWER PLAN
MAIN ELECTRICAL ROOMS
SCALE: 1/4" = 1'–0"

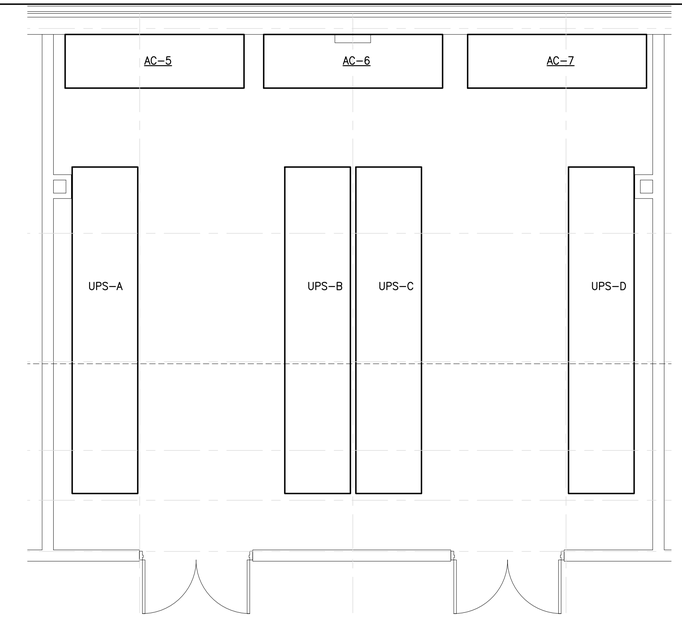


3 / E1.1 GROUND FLOOR POWER PLAN
MAIN ELECTRICAL ROOMS
SCALE: 1/4" = 1'–0"

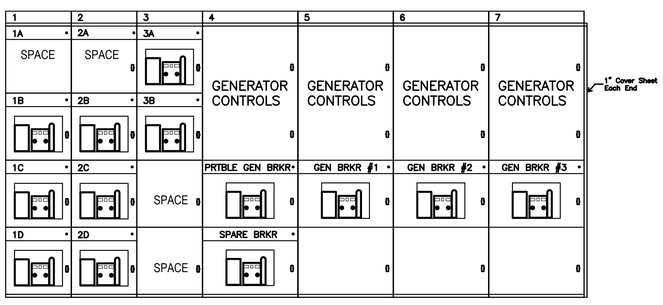


EMDP ELEVATION
SCALE: NO SCALE

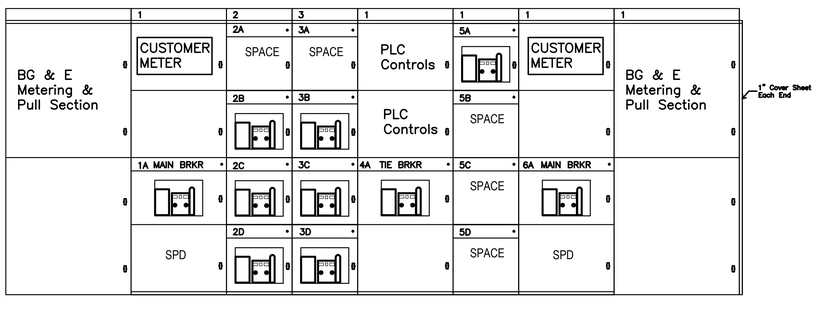


MDP ELEVATION
SCALE: NO SCALE

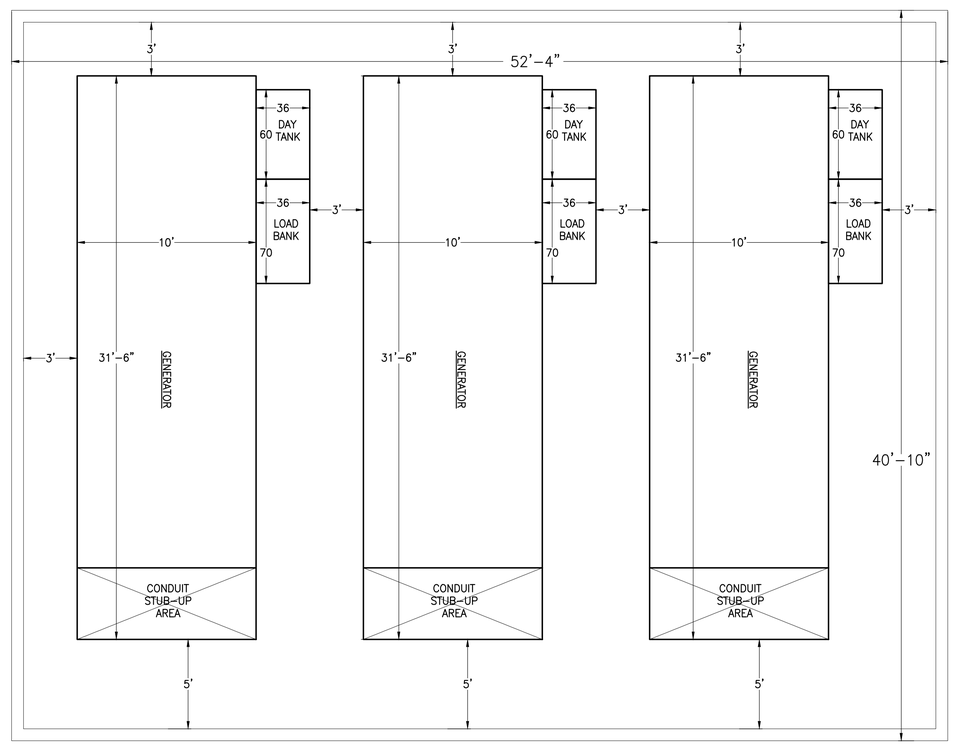


GENERATOR PAD PART PLAN
SCALE: 1/4" = 1'–0"

NOTE: GENERATORS AND PAD DIMENSIONS ARE CRITICAL. ANY CHANGES REQUIRED DUE TO CHANGING THE DIMENSIONS THAT REQUIRE ABOVE ARE TO BE THE CONTRACTOR'S RESPONSIBILITY AND SHALL BE AT NO ADDITIONAL COST TO THE OWNER. THIS INCLUDES THE DESIGN AND INSTALLATION OF DEEPER SLAB TURNDOWNS AND/OR FOUNDATION WALLS. ADJACENT GRADES ARE NOT TO BE CHANGED.

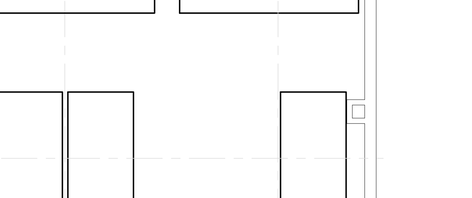


DETAIL – GENERATOR PAD

SCALE: 1/4" = 1'–0"
4 0 4 8


EDMEADES & STROMDAHL, LTD.
11 North Main Street
Bel Air, Maryland 21014
phone: 410.879.0388
Fax: 410.879.4785
E-mail: lbyte@eslarch.com


STROMDAHL


Gipe Associates Inc.
Consulting Engineers
848 Fairmount Ave. Suite 102
Baltimore, Maryland 21286
P. (410)832–2420
F. (410)832–2418
Easton, Maryland
W.O.# 06095


COMMUNICATIONS BUILDING
BASEMENT FLOOR PART PLANS

HARFORD COUNTY E.O.C.
PHASE 1 COMMUNICATIONS BUILDING
2220 ADY ROAD
FOREST HILL, MD 21050

COPYRIGHTED EDMEADES & STROMDAHL, LTD. 2008

Job No: 07033
Date: DEC. 18, 2012
Rev:
2 2/15/13–ADD #2

BID DOCUMENTS

Sheet No. 2 EA4.1

EDMEADES

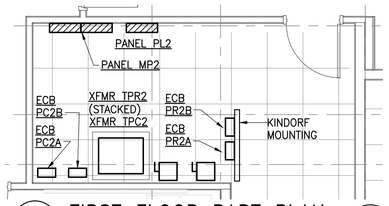


1 / EA4.2 FIRST FLOOR PART PLAN
ELECTRICAL ROOM
SCALE: 1/4" = 1'-0"

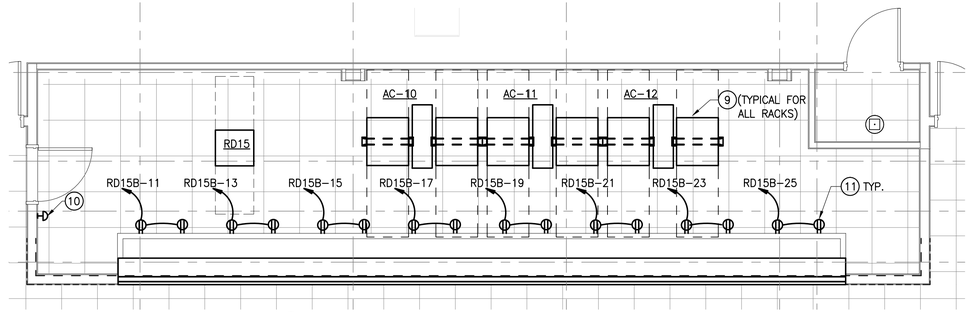


4 / EA4.2 FIRST FLOOR PART PLAN
COMPUTER CONTROL ROOM
SCALE: 1/4" = 1'-0"

## ELEVATOR MACHINE ROOM NOTES:

2 (1) ELEVATOR DISCONNECT. 3P-100A-F/SS (FUSE PER MANUFACTURERS NAMEPLATE DATA) WITH 2 N.O. AND 2 N.C. AUXILIARY CONTACTS. MAKE CONNECTION TO ELEVATOR CONTROLLER AS REQUIRED.

(2) 2P-30-F/SS (FUSE @ 15A) IN NEMA 1 ENCLOSURE, MAKE CONNECTION TO ELEVATOR CAB LIGHTING, FAN AND CONTROLS RESPECTIVELY AND LABEL EACH DISCONNECT FOR LOAD SERVED.

(3) PIT LIGHT FIXTURE, MOUNT 36" ABOVE PIT FLOOR. CIRCUIT AHEAD OF GFI RECEPTACLE. MOUNT LIGHT SWITCH ADJACENT TO PIT LADDER. (TYPICAL)

(4) MAKE ALL REQUIRED CONNECTIONS TO SUMP PUMP CONTROLLER: 120V,1ø,1/2HP.

## DRAWING NOTES:

(1) MOUNT TO SUIT MICROWAVE.

(2) MOUNT TO SUIT REFRIGERATOR.

(3) MOUNT TO SUIT FREEZER.

(4) MOUNT TO SUIT VENDING MACHINE.

(5) MOUNT TO SUIT RANGE. PROVIDE PROPER NEMA PLUG.

(6) MOUNT TO SUIT DISHWASHER.

(7) MOUNT TO SUIT WATER DISPENSER.

(8) MOUNT TO SUIT ANSUL SYSTEM. MAKE CONNECTIONS AS REQUIRED.

(9) REFER TO PANEL SCHEDULES FOR CONNECTION TO RACK MOUNTED POWER STRIP. REFER TO TECHNOLOGY DRAWINGS FOR POWER STRIP INFORMATION. MAKE ALL FINAL CONNECTIONS FROM POWER STRIP WHIP TO PANEL/BREAKER AS REQUIRED.

(10) MAKE CONNECTIONS TO EPO. REFER TO DETAILS FOR ADDITIONAL INFORMATION.

(11) MOUNT RECEPTACLES FOR TELEVISIONS ON ON MONITOR RACK. REFER TO DETAIL ON TA6.23 FOR ADDITIONAL INFORMATION.

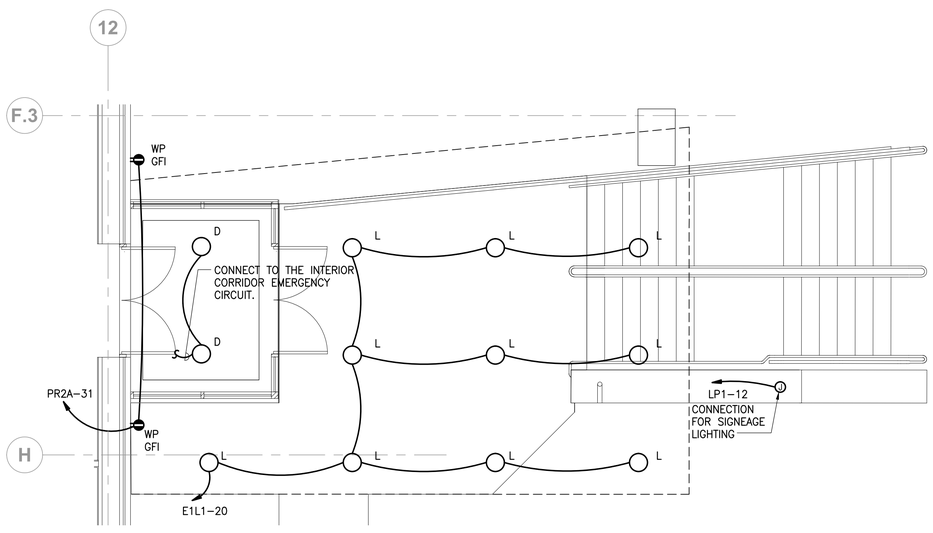


2 / EA4.2 FIRST FLOOR PART PLAN
ENTRANCE - POWER AND SPECIAL SYSTEMS
SCALE: 1/4" = 1'-0"

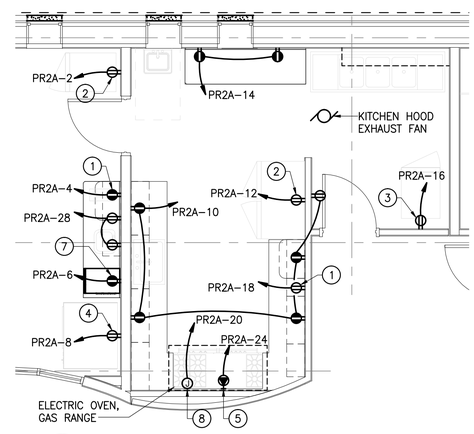


5 / EA4.2 FIRST FLOOR PART PLAN
KITCHEN
SCALE: 1/4" = 1'-0"

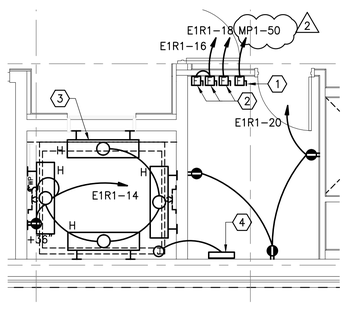


3 / EA4.2 FIRST FLOOR PART PLAN
ELEVATOR MACHINE ROOM
SCALE: 1/4" = 1'-0"

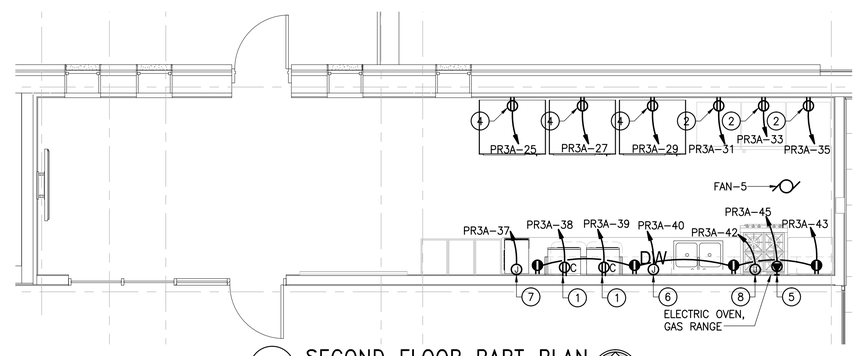


6 / EA4.2 SECOND FLOOR PART PLAN
KITCHEN
SCALE: 1/4" = 1'-0"

SCALE: 1/4" = 1'-0"
4 0 4 8

KEY PLAN
SCALE: NONE

EDMEADES & STROMDAHL, LTD.
11 North Main Street
Phone: 410.879.0388
E-mail: lbyte@eslarch.com
Bel Air, Maryland 21014
Fax: 410.879.4785

STROMDAHL

Gipe Associates Inc.
Consulting Engineers
948 Fairmount Ave Suite 102
Baltimore, Maryland 21286
P (410)832-2420
F (410)832-2418
Towson, Maryland
W.O.# 08095

COMMUNICATIONS BUILDING
FIRST FLOOR PART PLANS

HARFORD COUNTY E.O.C.
PHASE 1 COMMUNICATIONS BUILDING
2220 ADY ROAD
FOREST HILL, MD 21050

COPYRIGHTED EDMEADES & STROMDAHL LTD. 2008

Job No: 07033

Date: DEC. 18, 2012

Rev:
2 2/15/13-ADD #2

BID DOCUMENTS

Sheet No.
EA4.2

EDMEADES

## MAIN DOUBLE-ENDED SWITCHGEAR MDP

| | | |
|---|---|---|
| MOUNTING: FLOOR MOUNTED | A.I.C. RATING: 65,000 | LOCATION: MAIN ELEC RM |
| VOLTAGE: 480/277, 3PHASE, 4 WIRE | 4000 AMPERE MAIN BUS | 4000 AMPERE MAIN CIRCUIT BREAKER |

### DISTRIBUTION SECTION

| FDR NO | SERVES | CIRCUIT BREAKER P | FRAME | TRIP | WIRING SETS | NO | SIZE | GND | C | REMARKS | CONN KVA |
|---|---|---|---|---|---|---|---|---|---|---|---|
| 1A | MAIN | 3 | 4000 | 4000 | | | | | | ACCESSORY 3 | |
| 2A | SPACE | | | | | | | | | | |
| 2B | ATS #3 | 3 | 1000 | 1000 | 3 | 4 | 400 | 2/0 | 3-1/2 | | 608.8 |
| 2C | ATS #6 | 3 | 800 | 600 | 2 | 3 | 350 | 1 | 3 | | 156.0 |
| 2D | ATS #7 | 3 | 800 | 600 | 2 | 3 | 350 | 1 | 3 | | 138.0 |
| 3A | SPACE | | | | | | | | | | |
| 3B | ATS #2 | 3 | 2000 | 2000 | 6 | 4 | 400 | 250 | 3-1/2 | | 1533.1 |
| 3C | ATS #4 | 3 | 800 | 600 | 2 | 3 | 350 | 1 | 3 | | 159.6 |
| 3D | ATS #5 | 3 | 800 | 600 | 2 | 3 | 350 | 1 | 3 | | 168.6 |
| 4A | TIE | 3 | 4000 | 4000 | | | | | | ACCESSORIES 1,2,3 | |
| 5A | ATS #1 | 3 | 225 | 225 | 1 | 4 | 4/0 | 4 | 2-1/2 | DEDICATED VERTICAL SECTION | 59.7 |
| 6A | MAIN | 3 | 4000 | 4000 | | | | | | ACCESSORY 3 | |

TOTAL CONNECTED LOAD: 2823.8 KVA

PROVIDE GROUND FAULT AND SURGE PROTECTION AT MAIN BREAKERS AND THE FOLLOWING ACCESSORIES:
1. 2 POSITION SWITCH WITH INDICATOR LIGHTS (LOCAL/REMOTE CONTROL) CONTROLLING MAIN-TIE-MAIN
2. AUTO-MANUAL-TEST SWITCH WITH INDICATING LIGHTS
3. ELECTRICALLY OPERATED, BELL ALARM LOCKOUT

## MAIN SWITCHBOARD EMDP

| | | |
|---|---|---|
| MOUNTING: FLOOR MOUNTED | A.I.C. RATING: 65,000 | LOCATION: GENSET RM |
| VOLTAGE: 480/277, 3PHASE, 4 WIRE | 5000 AMPERE MAIN BUS - PARALLELING SWITCHGEAR | |

### DISTRIBUTION SECTION

| FDR NO | SERVES | CIRCUIT BREAKER P | FRAME | TRIP | WIRING SETS | NO | SIZE | GND | C | REMARKS | CONN KVA |
|---|---|---|---|---|---|---|---|---|---|---|---|
| 1A | SPACE | | | | | | | | | | |
| 1B | ATS #5 | 3 | 800 | 600 | 2 | 3 | 350 | 1 | 3 | | 168.6 |
| 1C | ATS #6 | 3 | 800 | 600 | 2 | 3 | 350 | 1 | 3 | | 156.0 |
| 1D | ATS #7 | 3 | 800 | 600 | 2 | 3 | 350 | 1 | 3 | | 138.0 |
| 2A | LOAD BANK | 3 | 600 | 600 | 2 | 3 | 350 | 1 | 3 | | |
| 2B | ATS #2 | 3 | 2000 | 2000 | 6 | 4 | 400 | 250 | 3-1/2 | | 1533.1 |
| 2C | ATS #3 | 3 | 1000 | 1000 | 3 | 4 | 400 | 2/0 | 3-1/2 | | 608.8 |
| 2D | ATS #4 | 3 | 800 | 600 | 2 | 3 | 350 | 1 | 3 | | 159.6 |
| 3A | ATS#1 | 3 | 225* | 225* | 1 | 4 | 3/0 | 4 | 2 | DEDICATED VERTICAL SECTION | 59.7 |
| 3B | FIRE PUMP | 3 | 100 | 80 | 1 | 4 | 3 | 8 | 2 | | |
| 4A | PORTABLE GENERATOR | 3 | 400 | 400 | REFER TO RISER | | | | | | |
| 4B | SPARE BREAKER | 3 | 1000 | 1000 | | | | | | | |
| 5A | GENERATOR #3 | 3 | 4000 | 2500 | 7 | 4 | 500 | 350 | 4 | (GENERATOR DUCTBANK) | |
| 6A | GENERATOR #2 | 3 | 4000 | 2500 | 7 | 4 | 500 | 350 | 4 | (GENERATOR DUCTBANK) | |
| 7A | GENERATOR #1 | 3 | 4000 | 2500 | 7 | 4 | 500 | 350 | 4 | (GENERATOR DUCTBANK) | |

TOTAL CONNECTED LOAD: 2823.8 KVA

*ATS #1 TO BE FUSED SWITCH
PROVIDE CONTROLS SO THAT NO MORE THAN TWO OF THE GENERATORS BE PARALLELED ONTO THE SWITCHGEAR AT ONE TIME.

## DRY TYPE TRANSFORMER SCHEDULE

| XFMR | KVA | PRIMARY ø | PRIMARY VOLTS | WIRING | PRIMARY CB | SECONDARY ø | SECONDARY VOLTS | WIRING | SECONDARY CB | NEUTRAL & CASE GRD | MOUNTING | NOTES |
|---|---|---|---|---|---|---|---|---|---|---|---|---|
| TE1R1 | 30 | 3 | 480 | 3#4+#10GW-1"C | 60 | 3 | 208/120 | 4#1+#8GW-1 1/2"C | 100 | #6 | FLOOR | |
| TMR1 | 112.5 | 3 | 480 | 3#4/0+#4GW-2"C | 225 | 3 | 208/120 | 2 SETS(4-500KCMIL+#1/0GW-4"C) | 400 | #2/0 | FLOOR | |
| TPR1 | 30 | 3 | 480 | 3#4+#10GW-1"C | 60 | 3 | 208/120 | 4#1+#8GW-1 1/2"C | 100 | #6 | FLOOR | |
| TPR2 | 75 | 3 | 480 | 3#1/0+#6GW-2"C | 150 | 3 | 208/120 | | | #2 | FLOOR | |
| TPR2A | | | | | | | | 4#1+#8GW-1 1/2"C | 100 | | | |
| TPR2B | | | | | | | | 4#1+#8GW-1 1/2"C | 100 | | | |
| TPC2 | 75 | 3 | 480 | 3#1/0+#6GW-2"C | 150 | 3 | 208/120 | | | #2 | FLOOR | |
| TPC2A | | | | | | | | 3#1+#3/0N+#8GW-2"C | 100 | | | K-RATED |
| TPC2B | | | | | | | | 3#1+#3/0N+#8GW-2"C | 100 | | | K-RATED |
| TPR3 | 75 | 3 | 480 | 3#1/0+#6GW-2"C | 150 | 3 | 208/120 | | | #2 | FLOOR | |
| TPR3-A | | | | | | | | 4#1+#8GW-1 1/2"C | 100 | | | |
| TPR3-B | | | | | | | | 4#1+#8GW-1 1/2"C | 100 | | | |
| TPC3 | 75 | 3 | 480 | 3#1/0+#6GW-2"C | 150 | 3 | 208/120 | | | #2 | FLOOR | |
| TPC3-A | | | | | | | | 3#1+#3/0N+#8GW-2"C | 100 | | | K-RATED |
| TPC3-B | | | | | | | | 3#1+#3/0N+#8GW-2"C | 100 | | | K-RATED |

## DRAWING NOTES:

1. FIRE PUMP CONTROLLER WITH INTEGRAL ATS FURNISHED UNDER FIRE PROTECTION DIVISION.
2. WIRE TROUGH SIZED PER NEC AS REQUIRED PER CODE.
3. REFER TO FEEDER SCHEDULE ON PANEL RDPC.
4. REFER TO FEEDER SCHEDULE ON PANEL RDPD.
5. 1750KW(2188KVA) DIESEL GENERATOR – 480/277V,3ø,4W – WITH 3P–2500A OUTPUT BREAKER.
6. UPS STATUS PANEL
7. 400A CONNECTION TO MOBILE GENERATOR. PROVIDE 2 SETS OF (4#3/0, 1#3GW IN 2–1/2"C.) COORDINATE EXACT OUTDOOR CONNECTION REQUIREMENTS WITH COUNTY. PROVIDE GENERATOR TERMINATION BOX SIMILAIR TO CUTLER–HAMMER RUGTB BOX.
8. 450KVA/405KW UPS 480V,3ø,3W INPUT, 480V,3ø,3W OUTPUT
9. 2 SETS OF (3–350KCMIL + 1#1 G. IN 3"C.)
10. TYPICAL REMOTE DISTRIBUTION UNIT DUAL FEEDS AND WITH (4) PANELS.
11. TYPICAL POWER DISTRIBUTION UNIT WITH STATIC TRANSFER SWITCH 225KVA,480V,3ø,3W DUAL INPUT, 208/120V,3ø,4W OUTPUT WITH INTEGRAL I–LINE PANEL.
12. GENERATOR STATUS PANEL
13. WIRE TROUGH SIZED PER NEC.
14. TEMPORARY 240/120V, 1ø, 125KW GENERATOR WITH AUTOMATIC TRANSFER SWITCH.
15. OBTAIN TEMPORARY BGE SERVICE FOR SEWAGE EJECTION STATION.
16. PROVIDE 208/120V,1ø,3W 60A MCB, 12–POLE ELECTRICAL PANEL IN NEMA 3R ENCLOSURE. PROVIDE ALL REQUIRED BREAKERS AND CIRCUITS (WIRING AND CONDUIT) TO SERVE SEWAGE EJECTOR PUMPING STATION DURING THE CONSTRUCTION OF THE MAIN BUILDING. MOUNT PANEL AND SUITABLE PROTECT FROM DAMAGE.
17. PROVIDE TEMPORARY OVERHEAD SERVICE. CONDUCTORS SHALL BE APPROPRIATE FOR 208/120V,1ø,3W 60A, OUTDOOR OVERHEAD USE. PROVIDE ALL NECESSARY POLES. REFER TO GENERAL PROVISIONS FOR GUIDELINES ON TEMPORARY SERVICES.

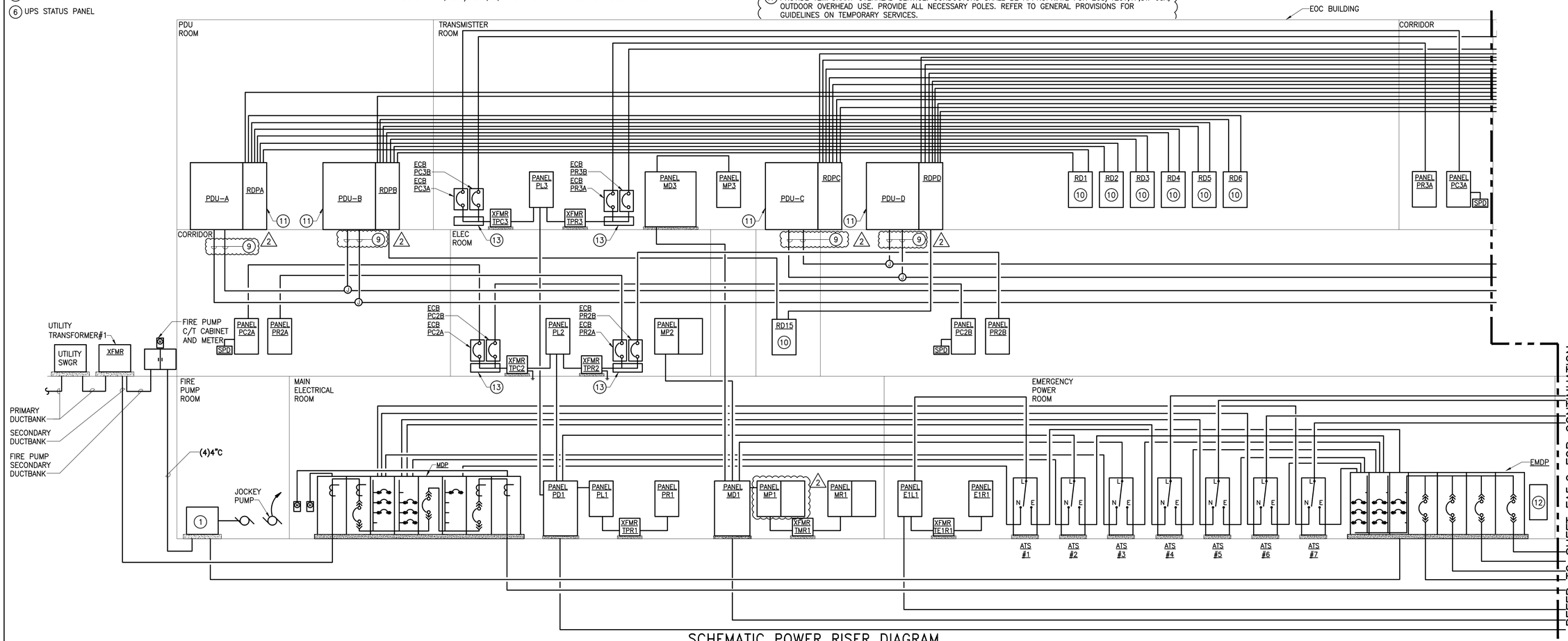


SCHEMATIC POWER RISER DIAGRAM

SCALE: NO SCALE

REFER TO SHEET EA5.2 FOR CONTINUATION


EDMEADES & STROMDAHL, LTD.
11 North Main Street
Phone: 410.879.0388
E-mail: lbyte@edarch.com
Bel Air, Maryland 21014
Fax: 410.879.4785


STROMDAHL


Gipe Associates Inc.
Consulting Engineers
849 Fairmount Ave Suite 102
Towson, Maryland 21286
P (410)832–2420
F (410)832–2418
Easton, Maryland
W.O.# 08095


HARFORD COUNTY E.O.C.
PHASE 1 COMMUNICATIONS BUILDING
2220 ADY ROAD
FOREST HILL, MD 21050

COPYRIGHTED EDMEADES & STROMDAHL LTD. 2008

POWER SCHEMATIC RISER DIAGRAM I

Job No: 07033
Date: DEC. 18, 2012
Rev: 2 2/15/13–ADD #2

BID DOCUMENTS

Sheet No. EA5.1

EDMEADES

## SWITCHBOARD MD1

2

| | | |
|---|---|---|
| MOUNTING: FLOOR MOUNTED | A.I.C. RATING: 65,000 | LOCATION: MAIN ELEC RM |
| VOLTAGE: 480/277, 3PHASE, 4 WIRE | 2000 AMPERE MAIN BUS | 2000 AMPERE MAIN CIRCUIT BREAKER |

**DISTRIBUTION SECTION**

| FDR NO | SERVES | CIRCUIT BREAKER P | FRAME | TRIP | WIRING SETS | NO | SIZE | GND | C | REMARKS | CONN KVA |
|---|---|---|---|---|---|---|---|---|---|---|---|
| 1 | PANEL MP1 | 3 | 600 | 600 | 2 | 4 | 350 | 1 | 3 | | 105.1 |
| 2 | PANEL MP2 | 3 | 400 | 400 | 2 | 4 | 3/0 | 3 | 2-1/2 | | 140.8 |
| 3 | PANEL MD3 | 3 | 1600 | 1600 | 5 | 4 | 400 | 4/0 | 3-1/2 | | 625.3 |
| 4 | PANEL MPH | 3 | 800 | 800 | 3 | | | | 4 | STUB OUT FOR FUTURE BLDG | 460.0 |
| 5 | P-1 | 3 | 225 | 225 | 1 | 3 | 3/0 | 6 | 2-1/2 | | 129.6 |
| 6 | P-2 (STAND-BY) | 3 | 225 | 225 | 1 | 3 | 3/0 | 6 | 2-1/2 | | |
| 7 | AC-8 | 3 | 60 | 40 | 1 | 4 | 8 | 10 | 3/4 | | 26.0 |
| 8 | AC-9 | 3 | 60 | 40 | 1 | 4 | 8 | 10 | 3/4 | | 26.0 |
| 9 | WATER-TO-WATER HEAT PUMP | 3 | 30 | 35 | 1 | 3 | 10 | 10 | 3/4 | | 20.3 |
| 10 | SPACE | | | | | | | | | | |
| | | | | | | | | | | TOTAL CONNECTED LOAD: | 1533.1 KVA |

## SWITCHBOARD PD1

2

| | | |
|---|---|---|
| MOUNTING: FLOOR MOUNTED | A.I.C. RATING: 65,000 | LOCATION: MAIN ELEC RM |
| VOLTAGE: 480/277, 3PHASE, 4 WIRE | 1000 AMPERE MAIN BUS | 1000 AMPERE MAIN CIRCUIT BREAKER |

**DISTRIBUTION SECTION**

| FDR NO | SERVES | CIRCUIT BREAKER P | FRAME | TRIP | WIRING SETS | NO | SIZE | GND | C | REMARKS | CONN KVA |
|---|---|---|---|---|---|---|---|---|---|---|---|
| 1 | PANEL PL1 | 3 | 100 | 100 | 1 | 4 | 2 | 6 | 1-1/4 | | 37.3 |
| 2 | PANEL PL2 | 3 | 225 | 225 | 1 | 4 | 3/0 | 4 | 2 | | 109.8 |
| 3 | PANEL PL3 | 3 | 225 | 225 | 1 | 4 | 3/0 | 4 | 2 | | 111.7 |
| 4 | PANEL PLH | 3 | 600 | 600 | 2 | - | - | - | 4 | STUB-OUT FOR FUTURE BLDG. | 350.0 |
| 5 | SPACE | | | | | | | | | | |
| | | | | | | | | | | TOTAL CONNECTED LOAD: | 608.76 KVA |

## AUTOMATIC TRANSFER SWITCH SCHEDULE

| NAME | POLES | SIZE | MINIMUM WITHSTAND | SERVES | ACCESS | REMARKS |
|---|---|---|---|---|---|---|
| ATS #1 | 4 | 225A | 65K | LIFE SAFETY | FRONT AND RIGHT | STEP 1 - MAINTENANCE BY-PASS |
| ATS #2 | 4 | 2000A | 65K | MECHANICAL LOADS | FRONT AND LEFT | STEP 2 - MAINTENANCE BY-PASS |
| ATS #3 | 4 | 1000A | 65K | RECEPTACLE AND LIGHTING LOADS | FRONT AND RIGHT | STEP 4 - MAINTENANCE BY-PASS |
| ATS #4 | 3 | 600A | 65K | UPS-A | FRONT AND RIGHT | STEP 3 - MAINTENANCE BY-PASS |
| ATS #5 | 3 | 600A | 65K | UPS-B | FRONT AND LEFT | STEP 3 - MAINTENANCE BY-PASS |
| ATS #6 | 3 | 600A | 65K | UPS-C | FRONT AND RIGHT | STEP 3 - MAINTENANCE BY-PASS |
| ATS #7 | 3 | 600A | 65K | UPS-D | FRONT AND LEFT | STEP 3 - MAINTENANCE BY-PASS |
| FIRE PUMP | 3 | | | FIRE PUMP | | STEP 1 - FURNISHED UNDER ANOTHER DIVISION |

## DRAWING NOTES:

1. FIRE PUMP CONTROLLER WITH INTEGRAL ATS FURNISHED UNDER FIRE PROTECTION DIVISION.
2. WIRE TROUGH SIZED PER NEC AS REQUIRED PER CODE.
3. REFER TO FEEDER SCHEDULE ON PANEL RDPC.
4. REFER TO FEEDER SCHEDULE ON PANEL RDPD.
5. (2) 1750KW(2188KVA) DIESEL GENERATOR – 480/277V,3ø,4W – WITH 3P–2500A OUTPUT BREAKER.
6. UPS STATUS PANEL
7. 400A CONNECTION TO MOBILE GENERATOR. PROVIDE 2 SETS OF (4#3/0, 1#3GW IN 2–1/2"C.) COORDINATE EXACT OUTDOOR CONNECTION REQUIREMENTS WITH COUNTY. PROVIDE GENERATOR TERMINATION BOX SIMILAIR TO CUTLER–HAMMER RUGTB BOX.
8. 450KVA/405KW UPS 480V,3ø,3W INPUT, 480V,3ø,3W OUTPUT
9. 2 SETS OF (3–350KCMIL + 1#1 G. IN 3"C.)
10. TYPICAL REMOTE DISTRIBUTION UNIT DUAL FEEDS AND WITH (4) PANELS.
11. TYPICAL POWER DISTRIBUTION UNIT WITH STATIC TRANSFER SWITCH 225KVA,480V,3ø,3W DUAL INPUT, 208/120V,3ø,4W OUTPUT WITH INTEGRAL I–LINE PANEL.
12. GENERATOR STATUS PANEL
13. WIRE TROUGH SIZED PER NEC.
14. (2) TEMPORARY 240/120V, 1ø, (1)25KW GENERATOR WITH AUTOMATIC TRANSFER SWITCH AND MINIMUM 6–HOUR FUEL SUPPLY AT FULL LOAD.
15. OBTAIN TEMPORARY BGE SERVICE FOR SEWAGE EJECTION STATION.
16. PROVIDE 208/120V,1ø,3W 60A MCB, 12–POLE ELECTRICAL PANEL IN NEMA 3R ENCLOSURE. PROVIDE ALL REQUIRED BREAKERS AND CIRCUITS (WIRING AND CONDUIT) TO SERVE SEWAGE EJECTOR PUMPING STATION DURING THE CONSTRUCTION OF THE MAIN BUILDING. MOUNT PANEL AND SUITABLE PROTECT FROM DAMAGE. UPON COMPLETION OF PERMANENT BUILDING ELECTRICAL SERVICE, CONNECT PUMPS AND CONTROLS TO PERMANENT BUILDING ELECTRICAL PANELS AS SHOWN ON EAS–2 AND AS INDICATED ON PANEL SCHEDULES.
17. PROVIDE TEMPORARY OVERHEAD SERVICE. CONDUCTORS SHALL BE APPROPRIATE FOR 208/120V,1ø,3W 60A, OUTDOOR OVERHEAD USE. PROVIDE ALL NECESSARY POLES. REFER TO GENERAL PROVISIONS FOR GUIDELINES ON TEMPORARY SERVICES.

## GENERAL NOTES:

1. REFER TO PANEL SCHEDULES FOR ADDITIONAL INFORMATION.
2. PROVIDE TRANSFORMER PRIMARY DISCONNECTS, WHERE INDICATED, SIZED TO MATCH (OR EXCEED) THE RATING OF THE PRIMARY CB INDICATED ON THE DRY TYPE TRANSFORMER SCHEDULE.
3. CONTRACTOR SHALL REDUCE FEEDER SIZE (IF REQUIRED) WITHIN 5'–0 OF EQUIPMENT TO ACCOMMODATE LUG SIZES.
4. PROVIDE RECESSED BOXES FOR SPD DEVICES.

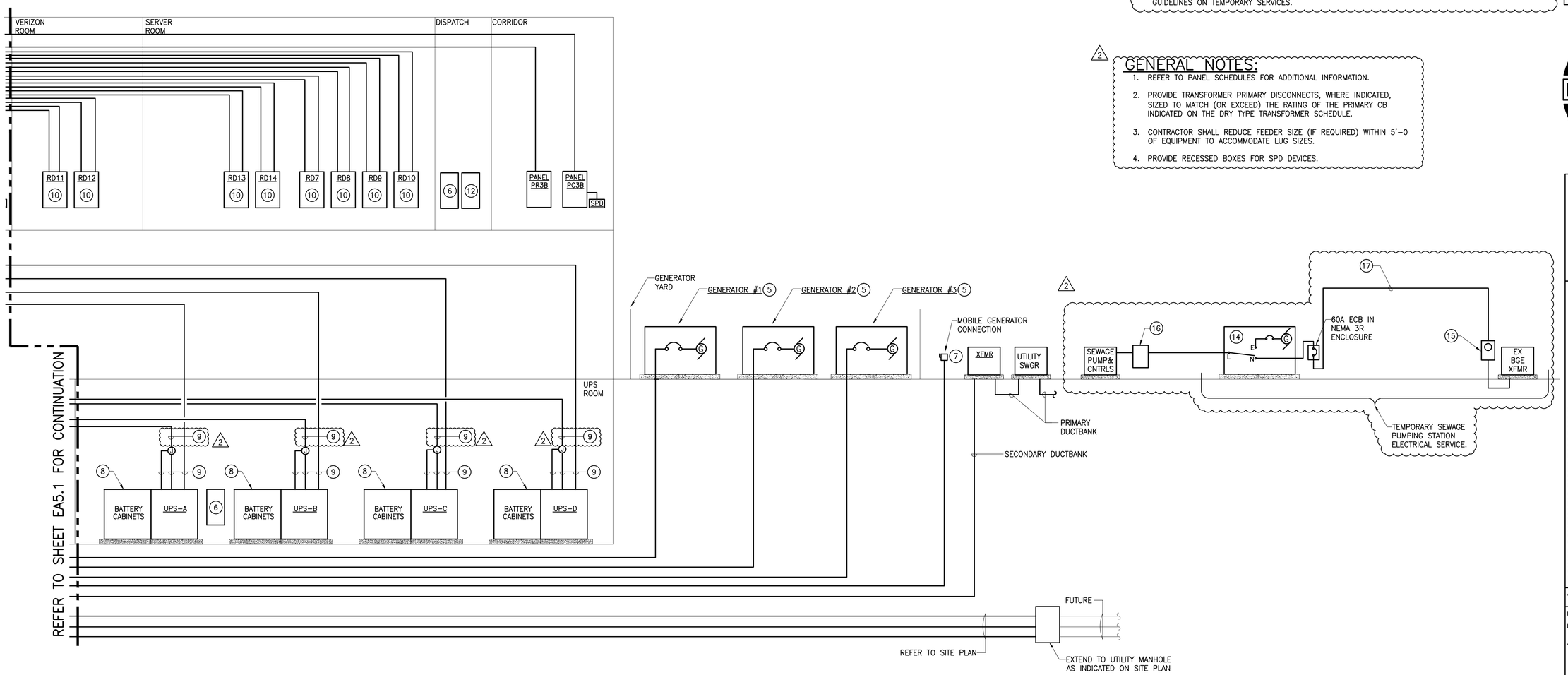


## SCHEMATIC POWER RISER DIAGRAM

SCALE: NO SCALE


EDMEADES & STROMDAHL, LTD.
11 North Main Street
Phone: 410.879.0388
E-mail: lhyde@eslarch.com
Bel Air, Maryland 21014
Fax: 410.879.4785



Gipe Associates Inc.
Consulting Engineers
849 Fairmount Ave Suite 102
Baltimore, Maryland 21286
P. (410)832–2420
F. (410)832–2418
Easton, Maryland
W.O.# 08095


POWER SCHEMATIC RISER DIAGRAM II

**HARFORD COUNTY E.O.C.**
**PHASE 1 COMMUNICATIONS BUILDING**
2220 ADY ROAD
FOREST HILL, MD 21050

COPYRIGHTED EDMEADES & STROMDAHL, LTD. 2008

Job No: 07033

Date: DEC. 18, 2012

Rev:

2 2/15/13–ADD #2

BID DOCUMENTS

Sheet No. EA5.2

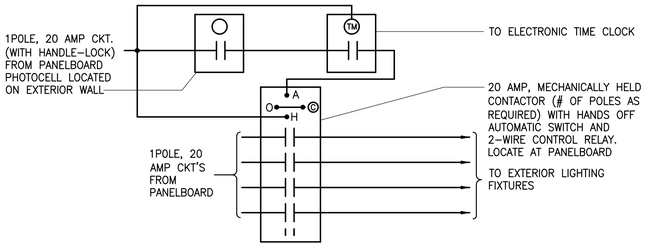


NOTE: ALL EXTERIOR LIGHTING FIXTURES (PARKING LOT LIGHTS, FLAGPOLE LIGHTS, BUILDING MOUNTED LIGHTS, ETC.) SHALL BE CONTROLLED VIA PHOTOCELL DUSK/DAWN.

## 1 ONE LINE DIAGRAM – EXTERIOR LIGHTING CONTROL

SCALE: NONE

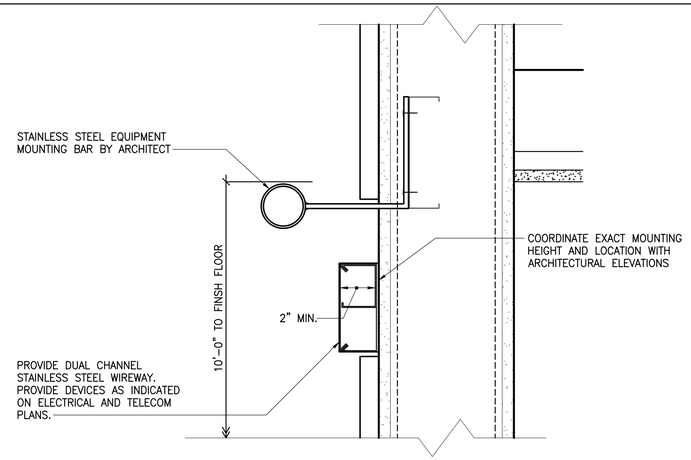


## 3 DETAIL – VIDEO RAIL DETAIL

SCALE: NONE

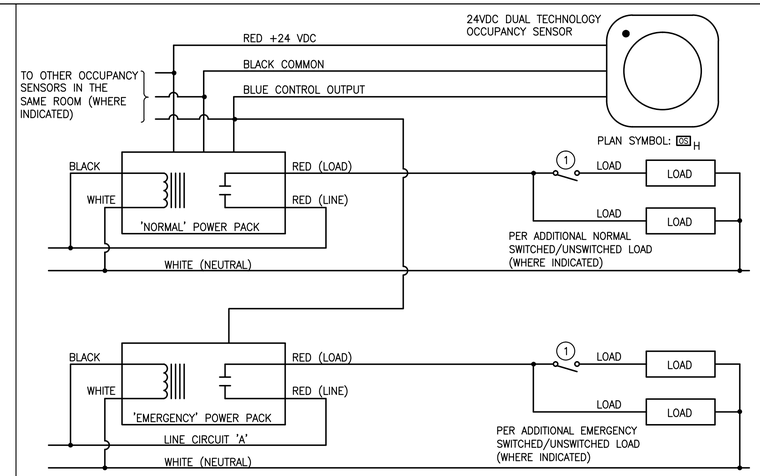


## 3 ONE LINE DIAGRAM – CORRIDOR OCCUPANCY SENSOR WIRING

NOTE:
1. ONE TOGGLE SWITCH FOR EACH LOAD.

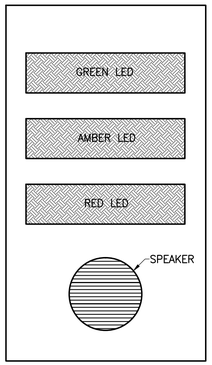


NOTES:
1. PROVIDE 3–LED STATUS INDICATOR WITH INTEGRAL BUZZER. CHROME FINISH. FEDERAL SIGNAL SCC–024TC OR APPROVED EQUAL.
2. COLOR SCHEMES SHALL BE AS FOLLOWS:
   GREEN – UTILITY POWER – STEADY BURN
   AMBER – GENERATOR POWER – FLASHING
   RED – UPS BATTERY POWER – FLASHING – BEEPING
3. PROVIDE STATUS INDICATOR AT EACH LOCATION INDICATED ON THE FLOOR PLANS. CONNECT TO CIRCUIT RD13–27.
4. PROVIDE ALL NECESSARY AUXILIARY CONTACTS AND RELAYS/WIRING AS REQUIRED ON NORMAL AND EMERGENCY SIDE OF AUTOMATIC TRANSFER SWITCH AS WELL AS UPS BATTERY POWER. LIGHTS AND ALARMS SHALL ONLY BE ON UNDER CONDITIONS AS NOTED IN THE LIGHTING SCHEME ABOVE.
5. PROVIDE PHENOLIC SIGN AT EACH LOCATION TO MATCH PHENOLIC SIGNS AS SPECIFIED BY THE ARCHITECT. SIGN SHALL BE LABELED AS FOLLOWS:
   UTILITY / GENERATOR / UPS STATUS INDICATOR
   GREEN – UTILITY POWER
   AMBER – GENERATOR POWER
   RED – UPS BATTERY POWER

## 4 UTILITY/GENERATOR/UPS POWER INDICATOR LIGHTS

SCALE: NONE

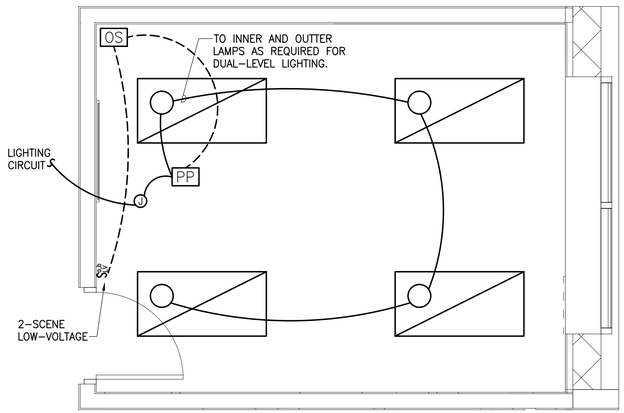


NOTE: SETTINGS TO BE APPLIED TO POWER PACK FOR AUTOMATIC OFF AND MANUAL ON.

## 5 TYPICAL 'LARGE' ROOM PART PLAN VACANCY SENSOR WIRING

SCALE: NONE

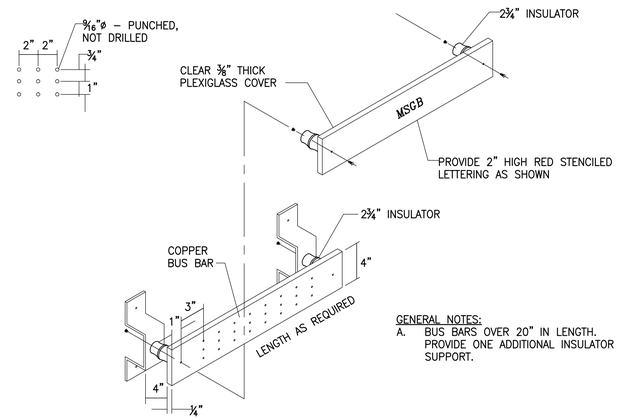


GENERAL NOTES:
A. BUS BARS OVER 20" IN LENGTH. PROVIDE ONE ADDITIONAL INSULATOR SUPPORT.

## 6 DETAIL–GROUNDING BUS BAR

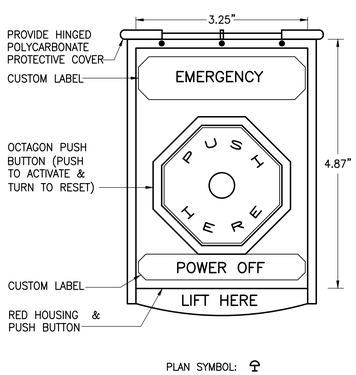


NOTES:
1. EMERGENCY PUSHBUTTON SHALL BE MAINTAINED TYPE WITH PROTECTIVE COVER.
2. REMOTE SHUTDOWN SWITCH SHALL COMPLY WITH ASME CSD–1–1992 "CONTROLS & SAFETY DEVICES FOR AUTOMATICALLY FIRED BOILERS".
3. PROVIDE CONTROL WIRING IN 3/4" CONDUIT FROM SHUTDOWN SWITCH TO ASSOCIATED EQUIPMENT CONTROL PANEL.

## 7 DETAIL – REMOTE SHUT–DOWN SWITCH

SCALE: NONE

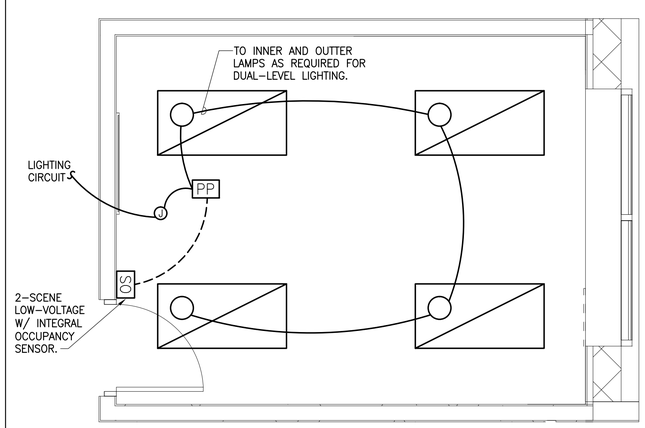


NOTE: SETTINGS TO BE APPLIED TO POWER PACK FOR AUTOMATIC OFF AND MANUAL ON.

## 8 TYPICAL 'SMALL' ROOM PART PLAN VACANCY SENSOR WIRING

SCALE: NONE

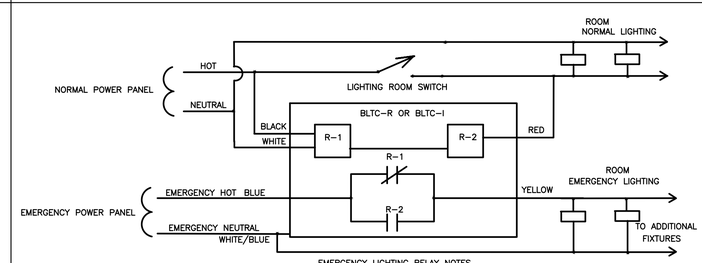


EMERGENCY LIGHTING RELAY NOTES

A. THIS DIAGRAM WAS BASED ON EQUIPMENT MANUFACTURED BY NINE24 INC. MEETING DESIGN GUIDE LINES AND MUST BE UL924 LISTED

1. A SEPERATE RELAY CONTACT ( RL2 ) IS USED TO SWITCH LIGHTING LOAD ON AND OFF TO ELIMINATE SWITCHING DAMAGE TO CONTACTS OF THE EMERGENCY RELAY ( RL1 ) FROM GENERAL EVERY DAY USAGE THEREFOR INCREASING RELIABILITY OF THE EMERGENCY RELAY
2. IN THE EVENT OF COMPONENT FAILURE DUE TO SPIKES ON THE AC LINE OR AGE THE EMERGENCY RELAY FAILS TO THE NORMALLY CLOSED POSITION AND RELIES ON NO OTHER POWER SOURCE TO BE IN EMERGENCY MODE
3. THE UNIT AS IS OUT OF THE BOX IS IN EMERGENCY MODE
4. THE UNIT HAS A BUILT IN TEST SWITCH
5. THE UNIT HAS LED INDICTOR FOR NORMAL POWER, EMERGENCY POWER AND TEST

THEORY OF OPERATION

A. NORMAL POWER FROM BREAKER IS APPLIED TO RL1 OPENING THE EMERGENCY RELAY PUTTING THE RELAY IN STANDBY MODE AND PROTECTING THE CONTACTS
B. POWER FROM ROOM SWITCH OR LIGHTING PANEL SWITCHES RL2 ON AND OFF IN CONJUNCTION WITH THE NORMAL ROOM LIGHTS AND RL2 TAKES ALL THE WEAR AND TEAR NOT THE EMERGENCY RELAY RL1
C. DURING POWER FAILURE RL1 CLOSES REGARDLESS OF RL2 AND ROOM SWITCH APPLYING POWER TO THE FIXTURES INTEGRAL TO FIXTURE IN BALLAST CHANNEL

## 9 LIGHTING EMERGENCY TRANSFER RELAY

SCALE: NONE


EDMEADES & STROMDAHL, LTD.
11 North Main Street
Phone: 410.879.0388
E-mail: lbyte@edarch.com
Bel Air, Maryland 21014
Fax: 410.879.4785



Gipe Associates Inc.
Consulting Engineers
848 Fairmount Ave Suite 102
Towson, Maryland 21286
P (410)832–2420
F (410)832–2418
Easton, Maryland
W.O.# 08095


POWER SCHEMATIC RISER DIAGRAM

HARFORD COUNTY E.O.C.
PHASE 1 COMMUNICATIONS BUILDING
2220 ADY ROAD
FOREST HILL, MD 21050

COPYRIGHTED EDMEADES & STROMDAHL, LTD. 2008

Job No: 07033

Date: DEC. 18, 2012

Rev:
2 2/15/13–ADD #2

BID DOCUMENTS

Sheet No.
EA7.4

## FUSE PANELE1L1

COOPER BUSSMAN FUSE PANEL WITH TIME-DELAY INDICATING FUSES OR APPROVED EQUAL.

**MOUNTING: SURFACE**
**LOCATION: GENSET ROOM**

**VOLTAGE: 480/277V,3P,4W** | **225 AMPERE BUS** | **225 A MAIN FUSE** | **100% RATED NEUTRAL BUS** | **65,000 A.I.C.**

| CONN KVA | CKT | DESCRIPTION | FUSE P | FUSE AMPS | CIRCUIT WIRING NO | SIZE | GND | C | CKT | DESCRIPTION | FUSE P | FUSE AMPS | CIRCUIT WIRING NO | SIZE | GND | C | CONN KVA |
|---|---|---|---|---|---|---|---|---|---|---|---|---|---|---|---|---|---|
| 5.3 | 1 | PANEL E1R1 | REFER TO XFMR SCHEDULE | | | | | | 2 | SPACE | 1 | - | | | | | |
| 4.6 | 3 | VIA XFMR | - | - | - | - | - | - | 4 | SPACE | 1 | - | | | | | |
| 3.0 | 5 | TE1R1 | - | - | - | - | - | - | 6 | SPACE | 1 | - | | | | | |
| 12.0 | 7 | E1LH | 3 | 60 | - | - | - | 4 | 8 | BASEMENT LIGHTING | 1 | 20 | 2 | 12 | 12 | 3/4 | 0.5 |
| 12.0 | 9 | (STUB-OUT FOR | - | - | - | - | - | - | 10 | BASEMENT LIGHTING | 1 | 20 | 2 | 12 | 12 | 3/4 | 0.6 |
| 12.0 | 11 | FUTURE BLDG) | - | - | - | - | - | - | 12 | STAIR 2 | 1 | 20 | 2 | 12 | 12 | 3/4 | 0.4 |
| 0.1 | 13 | 1ST FLR EXIT SIGNS | 1 | 20 | 2 | 12 | 12 | 3/4 | 14 | STAIR 3 | 1 | 20 | 2 | 12 | 12 | 3/4 | 0.4 |
| 1.7 | 15 | EM LTG-CORRS.,VESTS., LOBBY | 1 | 20 | 2 | 12 | 12 | 3/4 | 16 | EXTERIOR LTG | 1 | 20 | 2 | 12 | 12 | 3/4 | 1.0 |
| 1.2 | 17 | EM LTG-103,117,118,151,166 | 1 | 20 | 2 | 12 | 12 | 3/4 | 18 | ENTRANCE LIGHTING | 1 | 20 | 2 | 12 | 12 | 3/4 | 0.4 |
| 0.1 | 19 | 2ND FLR EXIT SIGNS | 1 | 20 | 2 | 12 | 12 | 3/4 | 20 | CANOPY | 1 | 20 | 2 | 12 | 12 | 3/4 | 0.6 |
| 1.1 | 21 | LTG-2ND FLR CORRS | 1 | 20 | 2 | 12 | 12 | 3/4 | 22 | SPACE | 1 | - | | | | | |
| 1.6 | 23 | 2ND FLR EMERG LTG | 1 | 20 | 2 | 12 | 12 | 3/4 | 24 | SPACE | 1 | - | | | | | |
| 0.4 | 25 | JOCKEY PUMP | 3 | 14 | 2 | 12 | 12 | 3/4 | 26 | SPACE | 1 | - | | | | | |
| 0.4 | 27 | -- | -- | - | | | | | 28 | SPACE | 1 | - | | | | | |
| 0.4 | 29 | -- | -- | - | | | | | 30 | SPACE | 1 | - | | | | | |
| | 31 | SPACE | 1 | - | | | | | 32 | SPACE | 1 | - | | | | | |
| | 33 | SPACE | 1 | - | | | | | 34 | SPACE | 1 | - | | | | | |
| | 35 | SPACE | 1 | - | | | | | 36 | SPACE | 1 | - | | | | | |
| | 37 | SPACE | 1 | - | | | | | 38 | SPACE | 1 | - | | | | | |
| | 39 | SPACE | 1 | - | | | | | 40 | SPACE | 1 | - | | | | | |
| | 41 | SPACE | 1 | - | | | | | 42 | SPACE | 1 | - | | | | | |

**TOTAL CONNECTED LOAD** 59.7 **KVA** KVA PER PHASE: A 19.352 B 21.352 C 18.976

## FUSE PANEL E1R1

COOPER BUSSMAN FUSE PANEL WITH TIME-DELAY INDICATING FUSES OR APPROVED EQUAL.

**MOUNTING: SURFACE**
**LOCATION: GENSET ROOM**

**VOLTAGE: 208/120V,3P,4W** | **100 AMPERE BUS** | **100 A MAIN FUSE** | **100% RATED NEUTRAL BUS** | **10,000 A.I.C.**

| CONN KVA | CKT | DESCRIPTION | FUSE P | FUSE AMPS | CIRCUIT WIRING NO | SIZE | GND | C | CKT | DESCRIPTION | FUSE P | FUSE AMPS | CIRCUIT WIRING NO | SIZE | GND | C | CONN KVA |
|---|---|---|---|---|---|---|---|---|---|---|---|---|---|---|---|---|---|
| 0.8 | 1 | DOOR HOLDERS | 1 | 20 | 2 | 12 | 12 | 3/4 | 2 | FIRE PUMP ROOM | 1 | 20 | 2 | 12 | 12 | 3/4 | 0.8 |
| 0.8 | 3 | DOOR HOLDERS | 1 | 20 | 2 | 12 | 12 | 3/4 | 4 | ELEVATOR PIT | 1 | 20 | 2 | 12 | 12 | 3/4 | 0.2 |
| | 5 | SPARE | 1 | 20 | | | | | 6 | ELEVATOR CAB | 1 | 20* | 2 | 12 | 12 | 3/4 | 0.2 |
| | 7 | SPARE | 1 | 20 | | | | | 8 | ELEVATOR LIGHTS | 1 | 20* | 2 | 12 | 12 | 3/4 | 0.2 |
| | 9 | SPARE | 1 | 20 | | | | | 10 | ELEVATOR MACH ROOM | 1 | 20* | 2 | 12 | 12 | 3/4 | 0.2 |
| | 11 | SPARE | 1 | 20 | | | | | 12 | ELEVATOR SHUNT TRIP | 1 | 20 | 2 | 12 | 12 | 3/4 | 0.2 |
| | 13 | SPARE | 1 | 20 | | | | | 14 | ELEVATOR PIT | 1 | 20 | 2 | 12 | 12 | 3/4 | 0.2 |
| | 15 | SPARE | 1 | 20 | | | | | 16 | ELEVATOR CAB | 1 | 20* | 2 | 12 | 12 | 3/4 | 0.2 |
| | 17 | SPACE | 1 | - | | | | | 18 | ELEVATOR LIGHTS | 1 | 20* | 2 | 12 | 12 | 3/4 | 0.2 |
| | 19 | SPACE | 1 | - | | | | | 20 | ELEVATOR MACH ROOM | 1 | 20* | 2 | 12 | 12 | 3/4 | 0.2 |
| | 21 | SPACE | 1 | - | | | | | 22 | FIRE ALARM | 1 | 20 | 2 | 12 | 12 | 3/4 | 0.5 |
| | 23 | SPACE | 1 | - | | | | | 24 | FIRE ALARM | 1 | 20 | 2 | 12 | 12 | 3/4 | 0.5 |
| | 25 | SPACE | 1 | - | | | | | 26 | PRE-ACTION SYSTEM #2 | 1 | 20 | 2 | 12 | 12 | 3/4 | 1.2 |
| | 27 | SPACE | 1 | - | | | | | 28 | PRE-ACTION SYSTEM #4 | 1 | 20 | 2 | 12 | 12 | 3/4 | 1.2 |
| | 29 | SPACE | 1 | - | | | | | 30 | PRE-ACTION SYSTEM #6 | 1 | 20 | 2 | 12 | 12 | 3/4 | 1.2 |
| | 31 | SPACE | 1 | - | | | | | 32 | PRE-ACTION SYSTEM #7 | 1 | 20 | 2 | 12 | 12 | 3/4 | 1.2 |
| | 33 | SPACE | 1 | - | | | | | 34 | PRE-ACTION SYSTEM #8 | 1 | 20 | 2 | 12 | 12 | 3/4 | 1.2 |
| 0.3 | 35 | SMOKE DAMPER | 1 | 20 | 2 | 12 | 12 | 3/4 | 36 | SMOKE DAMPER | 1 | 20 | 2 | 12 | 12 | 3/4 | 0.4 |
| 0.3 | 37 | SMOKE DAMPER | 1 | 20 | 2 | 12 | 12 | 3/4 | 38 | SMOKE DAMPER | 1 | 20 | 2 | 12 | 12 | 3/4 | 0.4 |
| 0.3 | 39 | SMOKE DAMPER | 1 | 20 | 2 | 12 | 12 | 3/4 | 40 | SPACE | 1 | - | | | | | |
| | 41 | SPACE | 1 | - | | | | | 42 | SPACE | 1 | - | | | | | |

**TOTAL CONNECTED LOAD** 12.8 **KVA** KVA PER PHASE: A 5.252 B 4.552 C 2.976

*GFCI TYPE DEVICE EXTERNALLY MOUNTED

## DISTRIBUTION PANEL MD3

MOUNTING: FLOOR MOUNTED | A.I.C. RATING: 75,000 | LOCATION: MAIN ELEC RM
VOLTAGE: 480/277, 3PHASE, 4 WIRE | 1600 AMPERE MAIN BUS | 1600 AMPERE MAIN CIRCUIT BREAKER

**DISTRIBUTION SECTION**

| FDR NO | SERVES | CIRCUIT BREAKER P | FRAME | TRIP | WIRING SETS | NO | SIZE | GND | C | REMARKS | CONN KVA |
|---|---|---|---|---|---|---|---|---|---|---|---|
| 1 | PANEL MP3 | 3 | 225 | 225 | 1 | 4 | 4/0 | 4 | 2-1/2 | | 102.0 |
| 2 | ERV-1 | 3 | 60 | 50 | 1 | 3 | 8 | 10 | 1 | | 34.0 |
| 3 | ERV-2 | 3 | 60 | 60 | 1 | 3 | 8 | 10 | 1 | | 39.0 |
| 4 | RTU-1 | 3 | 225 | 125 | 1 | 3 | 1 | 6 | 1-1/2 | | 109.7 |
| 5 | RTU-2 | 3 | 225 | 125 | 1 | 3 | 1 | 6 | 1-1/2 | | |
| 6 | RTU-3 | 3 | 225 | 200 | 1 | 3 | 3/0 | 6 | 2 | | 157.9 |
| 7 | RTU-4 | 3 | 225 | 200 | 1 | 3 | 3/0 | 6 | 2 | | |
| 8 | AC-1 | 3 | 60 | 40 | 1 | 4 | 8 | 10 | 3/4 | | 26.1 |
| 9 | AC-2 | 3 | 60 | 40 | 1 | 4 | 8 | 10 | 3/4 | | 26.1 |
| 10 | AC-3 | 3 | 60 | 40 | 1 | 4 | 8 | 10 | 3/4 | | 26.1 |
| 11 | AC-4 | 3 | 60 | 40 | 1 | 4 | 8 | 10 | 3/4 | | 26.1 |
| 13 | AC-5 | 3 | 60 | 40 | 1 | 4 | 8 | 10 | 3/4 | | 26.1 |
| 14 | AC-6 | 3 | 60 | 40 | 1 | 4 | 8 | 10 | 3/4 | | 26.1 |
| 15 | AC-7 | 3 | 60 | 40 | 1 | 4 | 8 | 10 | 3/4 | | 26.1 |
| 16 | SPACE | | | | | | | | | | |

PROVIDE GROUND FAULT PROTECTION AT MAIN CIRCUIT BREAK TOTAL CONNECTED LOA 625.2622 KVA

## PANEL MR1

**MOUNTING: SURFACE**
**LOCATION: GENSET ROOM**

**VOLTAGE: 208/120V,3P,4W** | **400 AMPERE BUS** | **400 A MCB** | **100% RATED NEUTRAL BUS** | **10,000 A.I.C.**

| CONN KVA | CKT | DESCRIPTION | BREAKER P | AMPS | CIRCUIT WIRING NO | SIZE | GND | C | CKT | DESCRIPTION | BREAKER P | AMPS | CIRCUIT WIRING NO | SIZE | GND | C | CONN KVA |
|---|---|---|---|---|---|---|---|---|---|---|---|---|---|---|---|---|---|
| 2.5 | 1 | EH-2 | 2 | 35 | 3 | 10 | 10 | 3/4 | 2 | EH-1 | 2 | 35 | 3 | 10 | 10 | 3/4 | 2.5 |
| 2.5 | 3 | -- | - | - | - | - | - | - | 4 | -- | - | - | - | - | - | - | 2.5 |
| | 5 | | | | | | | | 6 | | | | | | | | |
| 0.5 | 7 | TRAP PRIMER | 1 | 20 | 2 | 12 | 12 | 3/4 | 8 | P-1 | 1 | 30 | 2 | 10 | 10 | 3/4 | 1.9 |
| 0.5 | 9 | TRAP PRIMER | 1 | 20 | 2 | 12 | 12 | 3/4 | 10 | P-2 | 1 | 20 | 2 | 12 | 12 | 3/4 | 1.2 |
| 0.5 | 11 | TRAP PRIMER | 1 | 20 | 2 | 12 | 12 | 3/4 | 12 | P-3 | 1 | 30 | 2 | 10 | 10 | 3/4 | 1.9 |
| 0.2 | 13 | MIXING VALVE | 1 | 20 | 2 | 12 | 12 | 3/4 | 14 | OIL MINDER | 1 | 20 | 2 | 12 | 12 | 3/4 | 0.2 |
| 1.8 | 15 | PUMPING STATION | 2 | 35 | 3 | 8 | 10 | 1-1/4 | 16 | AC-10 (OUTDDOR) | 2 | 15 | 3 | 12 | 12 | 3/4 | 0.5 |
| 1.8 | 17 | PUMP 1 | - | - | - | - | - | - | 18 | -- | - | - | - | - | - | - | 0.5 |
| 1.0 | 19 | PUMP CONTROLS | 1 | 20 | 2 | 10 | 10 | 1 | 20 | AC-11 (OUTDDOR) | 2 | 15 | 3 | 12 | 12 | 3/4 | 0.5 |
| 2.0 | 21 | EWH-1 | 2 | 25 | 2 | 10 | 10 | 3/4 | 22 | -- | - | - | - | - | - | - | 0.5 |
| 2.0 | 23 | -- | - | - | - | - | - | - | 24 | AC-12 (OUTDDOR) | 2 | 15 | 3 | 12 | 12 | 3/4 | 0.5 |
| 2.0 | 25 | EWH-2 | 2 | 25 | 2 | 10 | 10 | 3/4 | 26 | -- | - | - | - | - | - | - | 0.5 |
| 2.0 | 27 | -- | - | - | - | - | - | - | 28 | AC-10 (INDDOR) | 2 | 40 | 3 | 8 | 10 | 1 | 2.6 |
| 2.0 | 29 | EWH-3 | 2 | 25 | 2 | 10 | 10 | 3/4 | 30 | -- | - | - | - | - | - | - | 2.6 |
| 2.0 | 31 | -- | - | - | - | - | - | - | 32 | AC-11 (INDDOR) | 2 | 40 | 3 | 8 | 10 | 1 | 2.6 |
| 1.8 | 33 | PUMPING STATION | 2 | 35 | 3 | 8 | 10 | 1-1/4 | 34 | -- | - | - | - | - | - | - | 2.6 |
| 1.8 | 35 | PUMP 2 | - | - | - | - | - | - | 36 | AC-12 (INDDOR) | 2 | 40 | 3 | 8 | 10 | 1 | 2.6 |
| | 37 | | | | | | | | 38 | -- | - | - | - | - | - | - | 2.6 |
| | 39 | | | | | | | | 40 | | | | | | | | |
| | 41 | | | | | | | | 42 | | | | | | | | |

**TOTAL CONNECTED LOAD** 55.7 **KVA** KVA PER PHASE: A 19 B 20.468 C 16.2

## PANEL MP1

**MOUNTING: SURFACE**
**LOCATION: GENSET ROOM**

**VOLTAGE: 480/277V,3P,4W** | **600 AMPERE BUS** | **600 A MCB** | **100% RATED NEUTRAL BUS** | **65,000 A.I.C.**

| CONN KVA | CKT | DESCRIPTION | BREAKER P | AMPS | CIRCUIT WIRING NO | SIZE | GND | C | CKT | DESCRIPTION | BREAKER P | AMPS | CIRCUIT WIRING NO | SIZE | GND | C | CONN KVA |
|---|---|---|---|---|---|---|---|---|---|---|---|---|---|---|---|---|---|
| 19.0 | 1 | PANEL MR1 | REFER TO XFMR SCHEDULE | | | | | | 2 | WSHP-01 | 3 | 15 | 3 | 12 | 12 | 3/4 | 2.5 |
| 20.5 | 3 | VIA XFMR | - | - | - | - | - | - | 4 | -- | - | - | - | - | - | - | 2.5 |
| 16.2 | 5 | TMR1 | - | - | - | - | - | - | 6 | -- | - | - | - | - | - | - | 2.5 |
| 1.7 | 7 | EUH-1 | 3 | 15 | 3 | 12 | 12 | 3/4 | 8 | WSHP-02 | 3 | 15 | 3 | 12 | 12 | 3/4 | 1.9 |
| 1.7 | 9 | -- | - | - | - | - | - | - | 10 | -- | - | - | - | - | - | - | 1.9 |
| 1.7 | 11 | -- | - | - | - | - | - | - | 12 | -- | - | - | - | - | - | - | 1.9 |
| 1.7 | 13 | EUH-2 | 3 | 15 | 3 | 12 | 12 | 3/4 | 14 | F-1 | 3 | 15 | 3 | 12 | 12 | 3/4 | 0.3 |
| 1.7 | 15 | -- | - | - | - | - | - | - | 16 | -- | - | - | - | - | - | - | 0.3 |
| 1.7 | 17 | -- | - | - | - | - | - | - | 18 | -- | - | - | - | - | - | - | 0.3 |
| 1.7 | 19 | EUH-3 | 3 | 15 | 3 | 12 | 12 | 3/4 | 20 | F-2 | 3 | 15 | 3 | 12 | 12 | 3/4 | 0.4 |
| 1.7 | 21 | -- | - | - | - | - | - | - | 22 | -- | - | - | - | - | - | - | 0.4 |
| 1.7 | 23 | -- | - | - | - | - | - | - | 24 | -- | - | - | - | - | - | - | 0.4 |
| 1.7 | 25 | EUH-4 | 3 | 15 | 3 | 12 | 12 | 3/4 | 26 | F-3 | 3 | 15 | 3 | 12 | 12 | 3/4 | 0.7 |
| 1.7 | 27 | -- | - | - | - | - | - | - | 28 | -- | - | - | - | - | - | - | 0.7 |
| 1.7 | 29 | -- | - | - | - | - | - | - | 30 | -- | - | - | - | - | - | - | 0.7 |
| 2.7 | 31 | WSHP-03 | 3 | 15 | 3 | 12 | 12 | 3/4 | 32 | F-4 | 3 | 15 | 3 | 12 | 12 | 3/4 | 0.5 |
| 2.7 | 33 | -- | - | - | - | - | - | - | 34 | -- | - | - | - | - | - | - | 0.5 |
| 2.7 | 35 | -- | - | - | - | - | - | - | 36 | -- | - | - | - | - | - | - | 0.5 |
| 1.5 | 37 | WSHP-04 | 1 | 15 | 2 | 12 | 12 | 3/4 | 38 | F-5 | 3 | 15 | 3 | 12 | 12 | 3/4 | 0.2 |
| 0.0 | 39 | SPACE | 1 | - | - | - | - | - | 40 | -- | - | - | - | - | - | - | 0.2 |
| 0.0 | 41 | SPACE | 1 | - | - | - | - | - | 42 | -- | - | - | - | - | - | - | 0.2 |

CONNECTED LOAD (SECTION I) 105.1 KVA KVA PER PHASE: A 36.467 B 36.468 C 32.2

## PANEL MP2 (SECTION I)

**MOUNTING: SURFACE**
**LOCATION: GENSET ROOM**

**VOLTAGE: 480/277V,3P,4W** | **400 AMPERE BUS** | **400 A MCB** | **100% RATED NEUTRAL BUS** | **65,000 A.I.C.**

| CONN KVA | CKT | DESCRIPTION | BREAKER P | AMPS | CIRCUIT WIRING NO | SIZE | GND | C | CKT | DESCRIPTION | BREAKER P | AMPS | CIRCUIT WIRING NO | SIZE | GND | C | CONN KVA |
|---|---|---|---|---|---|---|---|---|---|---|---|---|---|---|---|---|---|
| 4.6 | 1 | WSHP 1-1 | 1 | 25 | 2 | 12 | 12 | 3/4 | 2 | WSHP 1-12 | 1 | 25 | 2 | 12 | 12 | 3/4 | 4.6 |
| 2.7 | 3 | WSHP 1-2 | 3 | 15 | 3 | 12 | 12 | 3/4 | 4 | SPACE | 1 | - | - | - | - | - | |
| 2.7 | 5 | -- | - | ED | - | - | - | - | 6 | SPACE | 1 | - | - | - | - | - | |
| 2.7 | 7 | -- | - | - | - | - | - | - | 8 | WSHP 1-13 | 3 | 15 | 3 | 12 | 12 | 3/4 | 3.2 |
| 6.6 | 9 | WSHP 1-3 | 3 | 30 | 3 | 10 | 10 | 3/4 | 10 | -- | - | - | - | - | - | - | 3.2 |
| 6.6 | 11 | -- | - | - | - | - | - | - | 12 | -- | - | - | - | - | - | - | 3.2 |
| 6.6 | 13 | -- | - | - | - | - | - | - | 14 | WSHP 1-14 | 1 | 15 | 2 | 12 | 12 | 3/4 | 2.0 |
| 1.9 | 15 | WSHP 1-4 | 3 | 15 | 3 | 12 | 12 | 3/4 | 16 | WSHP 1-15 | 3 | 15 | 3 | 12 | 12 | 3/4 | 2.5 |
| 1.9 | 17 | -- | - | - | - | - | - | - | 18 | -- | - | - | - | - | - | - | 2.5 |
| 1.9 | 19 | -- | - | - | - | - | - | - | 20 | -- | - | - | - | - | - | - | 2.5 |
| 2.8 | 21 | WSHP 1-5 | 1 | 15 | 2 | 12 | 12 | 3/4 | 22 | WSHP 1-16 | 1 | 15 | 2 | 12 | 12 | 3/4 | 2.2 |
| 2.8 | 23 | WSHP 1-6 | 1 | 15 | 2 | 12 | 12 | 3/4 | 24 | WSHP 1-17 | 3 | 15 | 3 | 12 | 12 | 3/4 | 2.7 |
| 2.7 | 25 | WSHP 1-7 | 3 | 15 | 3 | 12 | 12 | 3/4 | 26 | -- | - | - | - | - | - | - | 2.7 |
| 2.7 | 27 | -- | - | - | - | - | - | - | 28 | -- | - | - | - | - | - | - | 2.7 |
| 2.7 | 29 | -- | - | - | - | - | - | - | 30 | WSHP 1-18 | 1 | 15 | 2 | 12 | 12 | 3/4 | 2.0 |
| 2.7 | 31 | WSHP 1-8 | 3 | 15 | 3 | 12 | 12 | 3/4 | 32 | WSHP 1-19 | 1 | 15 | 2 | 12 | 12 | 3/4 | 2.2 |
| 2.7 | 33 | -- | - | - | - | - | - | - | 34 | WSHP 1-20 | 1 | 15 | 2 | 12 | 12 | 3/4 | 2.7 |
| 2.7 | 35 | -- | - | - | - | - | - | - | 36 | WSHP 1-21 | 3 | 20 | 3 | 12 | 12 | 3/4 | 4.0 |
| 2.0 | 37 | WSHP 1-9 | 1 | 15 | 2 | 12 | 12 | 3/4 | 38 | -- | - | - | - | - | - | - | 4.0 |
| 4.6 | 39 | WSHP 1-10 | 1 | 25 | 2 | 12 | 12 | 3/4 | 40 | -- | - | - | - | - | - | - | 4.0 |
| 4.6 | 41 | WSHP 1-11 | 1 | 25 | 2 | 12 | 12 | 3/4 | 42 | WSHP 1-22 | 1 | 15 | 2 | 12 | 12 | 3/4 | 1.6 |

CONNECTED LOAD (SECTION I) 125.6 KVA KVA PER PHASE: A 44.4 B 41.26 C 40.0

## PANEL MP1 (SECTION II)

**MOUNTING: SURFACE**
**LOCATION: GENSET ROOM**

**VOLTAGE: 480/277V,3P,4W** | **600 AMPERE BUS** | **600 MLO** | **100% RATED NEUTRAL BUS** | **65,000 A.I.C.**

| CONN KVA | CKT | DESCRIPTION | BREAKER P | AMPS | CIRCUIT WIRING NO | SIZE | GND | C | CKT | DESCRIPTION | BREAKER P | AMPS | CIRCUIT WIRING NO | SIZE | GND | C | CONN KVA |
|---|---|---|---|---|---|---|---|---|---|---|---|---|---|---|---|---|---|
| 4.7 | 43 | DOMESTIC BOOSTER | 3 | 25 | 3 | 12 | 12 | 3/4 | 44 | VAC-1 | 3 | 20 | 4 | 12 | 12 | 3/4 | 3.0 |
| 4.7 | 45 | WATER SYSTEM | - | - | - | - | - | - | 46 | -- | - | - | - | - | - | - | 3.0 |
| 4.7 | 47 | -- | - | - | - | - | - | - | 48 | -- | - | - | - | - | - | - | 3.0 |
| 7.2 | 49 | ELEVATOR 1 | 3 | 60 | 3 | 6 | 10 | 1 | 50 | ELEVATOR 2 | 3 | 60 | 3 | 6 | 10 | 1 | 7.2 |
| 7.2 | 51 | -- | - | - | - | - | - | - | 52 | -- | - | - | - | - | - | - | 7.2 |
| 7.2 | 53 | -- | - | - | - | - | - | - | 54 | -- | - | - | - | - | - | - | 7.2 |
| | 55 | | | | | | | | 56 | | | | | | | | |
| | 57 | | | | | | | | 58 | | | | | | | | |
| | 59 | | | | | | | | 60 | | | | | | | | |
| | 61 | | | | | | | | 62 | | | | | | | | |
| | 63 | | | | | | | | 64 | | | | | | | | |
| | 65 | | | | | | | | 66 | | | | | | | | |
| | 67 | | | | | | | | 68 | | | | | | | | |
| | 69 | | | | | | | | 70 | | | | | | | | |
| | 71 | | | | | | | | 72 | | | | | | | | |
| | 73 | | | | | | | | 74 | | | | | | | | |
| | 75 | | | | | | | | 76 | | | | | | | | |
| | 77 | | | | | | | | 78 | | | | | | | | |
| | 79 | | | | | | | | 80 | | | | | | | | |
| | 81 | | | | | | | | 82 | | | | | | | | |
| | 83 | | | | | | | | 84 | | | | | | | | |

CONNECTED LOAD (SECTION II) 66.311 KVA KVA PER PHASE: A 22.111 B 22.1 C 22.1
**TOTAL CONNECTED LOAD** 171.45 **KVA** KVA PER PHASE: A 58.578 B 58.568 C 54.3

**TOTAL CONNECTED LOAD** 105.1 **KVA** KVA PER PHASE: A 36.5 B 36.468 C 32.2

## PANEL MP2 (SECTION II)

**MOUNTING: SURFACE**
**LOCATION: GENSET ROOM**

**VOLTAGE: 480/277V,3P,4W** | **400** | **400** | **100% RATED NEUTRAL BUS** | **65,000 A.I.C.**

| CONN KVA | CKT | DESCRIPTION | BREAKER P | AMPS | CIRCUIT WIRING NO | SIZE | GND | C | CKT | DESCRIPTION | BREAKER P | AMPS | CIRCUIT WIRING NO | SIZE | GND | C | CONN KVA |
|---|---|---|---|---|---|---|---|---|---|---|---|---|---|---|---|---|---|
| 3.3 | 43 | WSHP 1-23 | 3 | 15 | 3 | 12 | 12 | 3/4 | 44 | SPACE | 1 | - | | | | | |
| 3.3 | 45 | -- | - | - | - | - | - | - | 46 | SPACE | 1 | - | | | | | |
| 3.3 | 47 | -- | - | - | - | - | - | - | 48 | SPACE | 1 | - | | | | | |
| 3.1 | 49 | WSHP 1-24 | 1 | 15 | 2 | 12 | 12 | 3/4 | 50 | SPACE | 1 | - | | | | | |
| 1.1 | 51 | WSHP 1-25 | 1 | 15 | 2 | 12 | 12 | 3/4 | 52 | SPACE | 1 | - | | | | | |
| 1.1 | 53 | WSHP 1-26 | 1 | 15 | 2 | 12 | 12 | 3/4 | 54 | SPACE | 1 | - | | | | | |
| | 55 | | | | | | | | 56 | SPACE | 1 | - | | | | | |
| | 57 | | | | | | | | 58 | SPACE | 1 | - | | | | | |
| | 59 | | | | | | | | 60 | SPACE | 1 | - | | | | | |
| | 61 | | | | | | | | 62 | SPACE | 1 | - | | | | | |
| | 63 | | | | | | | | 64 | SPACE | 1 | - | | | | | |
| | 65 | | | | | | | | 66 | SPACE | 1 | - | | | | | |
| | 67 | | | | | | | | 68 | SPACE | 1 | - | | | | | |
| | 69 | | | | | | | | 70 | SPACE | 1 | - | | | | | |
| | 71 | | | | | | | | 72 | SPACE | 1 | - | | | | | |
| | 73 | SPACE | 1 | - | | | | | 74 | SPACE | 1 | - | | | | | |
| | 75 | SPACE | 1 | - | | | | | 76 | SPACE | 1 | - | | | | | |
| | 77 | SPACE | 1 | - | | | | | 78 | SPACE | 1 | - | | | | | |
| | 79 | SPACE | 1 | - | | | | | 80 | SPACE | 1 | - | | | | | |
| | 81 | SPACE | 1 | - | | | | | 82 | SPACE | 1 | - | | | | | |
| | 83 | SPACE | 1 | - | | | | | 84 | SPACE | 1 | - | | | | | |

CONNECTED LOAD (SECTION II) 15.19 KVA KVA PER PHASE: A 6.4 B 4.4 C 4.4
**TOTAL CONNECTED LOAD** 140.82 **KVA** KVA PER PHASE: A 50.7 B 45.7 C 44.4

## PANEL MP3

**MOUNTING: SURFACE**
**LOCATION: TRANSMITTER ROOM**

**VOLTAGE: 480/277V,3P,4W** | **225 AMPERE BUS** | **225 A MCB** | **100% RATED NEUTRAL BUS** | **65,000 A.I.C.**

| CONN KVA | CKT | DESCRIPTION | BREAKER P | AMPS | CIRCUIT WIRING NO | SIZE | GND | C | CKT | DESCRIPTION | BREAKER P | AMPS | CIRCUIT WIRING NO | SIZE | GND | C | CONN KVA |
|---|---|---|---|---|---|---|---|---|---|---|---|---|---|---|---|---|---|
| 2.0 | 1 | WSHP 2-1 | 1 | 15 | 2 | 12 | 12 | 3/4 | 2 | WSHP 2-12 | 3 | 15 | 3 | 12 | 12 | 3/4 | 3.2 |
| 2.5 | 3 | WSHP 2-2 | 3 | 15 | 3 | 12 | 12 | 3/4 | 4 | -- | - | - | - | - | - | - | 3.2 |
| 2.5 | 5 | -- | - | - | - | - | - | - | 6 | -- | - | - | - | - | - | - | 3.2 |
| 2.5 | 7 | -- | - | - | - | - | - | - | 8 | WSHP 2-13 | 3 | 15 | 3 | 12 | 12 | 3/4 | 2.9 |
| 4.6 | 9 | WSHP 2-3 | 1 | 25 | 2 | 12 | 12 | 3/4 | 10 | -- | - | - | - | - | - | - | 2.9 |
| 2.4 | 11 | WSHP 2-4 | 3 | 15 | 3 | 12 | 12 | 3/4 | 12 | -- | - | - | - | - | - | - | 2.9 |
| 2.4 | 13 | -- | - | - | - | - | - | - | 14 | WSHP 2-15 | 3 | 15 | 3 | 12 | 12 | 3/4 | 2.4 |
| 2.4 | 15 | -- | - | - | - | - | - | - | 16 | -- | - | - | - | - | - | - | 2.4 |
| 2.4 | 17 | WSHP 2-5 | 3 | 15 | 3 | 12 | 12 | 3/4 | 18 | -- | - | - | - | - | - | - | 2.4 |
| 2.4 | 19 | -- | - | - | - | - | - | - | 20 | CU-1 | 3 | 20 | 3 | 12 | 12 | 3/4 | 4.4 |
| 2.4 | 21 | -- | - | - | - | - | - | - | 22 | -- | - | - | - | - | - | - | 4.4 |
| 2.5 | 23 | WSHP 2-6 | 3 | 15 | 3 | 12 | 12 | 3/4 | 24 | -- | - | - | - | - | - | - | 4.4 |
| 2.5 | 25 | -- | - | - | - | - | - | - | 26 | HP-1 | 3 | 15 | 3 | 12 | 12 | 3/4 | 0.6 |
| 2.5 | 27 | -- | - | - | - | - | - | - | 28 | -- | | | | | | | 0.6 |
| 2.8 | 29 | WSHP 2-7 | 1 | 15 | 2 | 10 | 10 | 3/4 | 30 | -- | | | | | | | 0.6 |
| 2.0 | 31 | WSHP 2-8 | 1 | 15 | 2 | 10 | 10 | 3/4 | 32 | HP-1 HEATER | 3 | 20 | 3 | 12 | 12 | 3/4 | 3.3 |
| 2.0 | 33 | WSHP 2-9 | 1 | 15 | 2 | 10 | 10 | 3/4 | 34 | -- | - | - | - | - | - | - | 3.3 |
| 2.0 | 35 | WSHP 2-10 | 1 | 15 | 2 | 10 | 10 | 3/4 | 36 | -- | - | - | - | - | - | - | 3.3 |
| 2.0 | 37 | WSHP 2-11 | 1 | 15 | 2 | 10 | 10 | 3/4 | 38 | FAN-6 | 3 | 15 | 3 | 12 | 12 | 3/4 | 0.7 |
| 2.8 | 39 | WSHP 2-14 | 1 | 15 | 2 | 10 | 10 | 3/4 | 40 | -- | - | - | - | - | - | - | 0.7 |
| | 41 | SPACE | 1 | - | - | - | - | - | 42 | -- | - | - | - | - | - | - | 0.7 |

**TOTAL CONNECTED LOAD** 102.0 **KVA** KVA PER PHASE: A 33.24 B 36.67 C 32.07

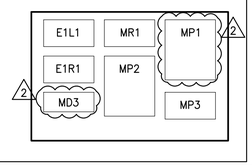



EDMEADES & STROMDAHL, LTD.
11 North Main Street
Bel Air, Maryland 21014
Phone: 410.879.0388
Fax: 410.879.4785
E-mail: lbyte@edstrcl.com



Gipe Associates Inc.
Consulting Engineers
849 Fairmount Ave. Suite 102
Towson, Maryland 21286
P. (410)832-2420
F. (410)832-2418
Easton, Maryland
W.O.# 080095


PANEL SCHEDULES II

**HARFORD COUNTY E.O.C.**
**PHASE 1 COMMUNICATIONS BUILDING**
2220 ADY ROAD
FOREST HILL, MD 21050

COPYRIGHTED EDMEADES & STROMDAHL, LTD. 2008

Job No: 07033
Date: DEC. 18, 2012
Rev: 2 2/15/13–ADD #2

BID DOCUMENTS

Sheet No. EA8.2

## PANEL PL1

VOLTAGE: 480/277V,3P,4W — MOUNTING: SURFACE — LOCATION: GENSET ROOM

100 AMPERE BUS | 100 A MCB | 100% RATED NEUTRAL BUS | 50,000 A.I.C.

| CONN | | | BREAKER | | CIRCUIT WIRING | | | | | | BREAKER | | CIRCUIT WIRING | | | | CONN |
|---|---|---|---|---|---|---|---|---|---|---|---|---|---|---|---|---|---|
| KVA | CKT | DESCRIPTION | P | AMPS | NO | SIZE | GND | C | CKT | DESCRIPTION | P | AMPS | NO | SIZE | GND | C | KVA |
| 10.0 | 1 | PANEL PR1 | REFER TO XFMR SCHEDULE | | | | | | 2 | SITE LTG - DRIVEWAY | 1 | 20 | 2 | 6 | 10 | 1 | 2.1 |
| 9.1 | 3 | VIA XFMR | - | - | - | - | - | - | 4 | SITE LTG - GUEST PARK | 1 | 20 | 2 | 8 | 10 | 1 | 1.0 |
| 6.1 | 5 | TPR1 | - | - | - | - | - | - | 6 | SITE LTG - EMPLY PARK | 1 | 20 | 2 | 6 | 10 | 1 | 1.4 |
| 1.0 | 7 | SIGN | 1 | 20 | 2 | 8 | 10 | 1 | 8 | SITE LTG - BOLLARDS | 1 | 20 | 2 | 8 | 10 | 1 | 0.8 |
| 1.0 | 9 | BASEMENT CORRIDOR | 1 | 20 | 2 | 12 | 12 | 3/4 | 10 | SITE LTG - BLDG | 1 | 20 | 2 | 10 | 10 | 1 | 1.0 |
| 1.5 | 11 | ELECTRICAL ROOMS | 1 | 20 | 2 | 12 | 12 | 3/4 | 12 | SIGN LIGHT | 1 | 20 | 2 | 10 | 10 | 1 | 0.4 |
| 1.2 | 13 | MECHANICAL ROOMS | 1 | 20 | 2 | 12 | 12 | 3/4 | 14 | SPACE | 1 | - | | | | | |
| 0.3 | 15 | STAIR 2 | 1 | 20 | 2 | 12 | 12 | 3/4 | 16 | SPACE | 1 | - | | | | | |
| 0.4 | 17 | STAIR 1 | 1 | 20 | 2 | 12 | 12 | 3/4 | 18 | SPACE | 1 | - | | | | | |
| | 19 | SPARE | 1 | 20 | | | | | 20 | SPACE | 1 | - | | | | | |
| | 21 | SPARE | 1 | 20 | | | | | 22 | SPACE | 1 | - | | | | | |
| | 23 | SPACE | 1 | - | | | | | 24 | SPACE | 1 | - | | | | | |
| | 25 | SPACE | 1 | - | | | | | 26 | SPACE | 1 | - | | | | | |
| | 27 | SPACE | 1 | - | | | | | 28 | SPACE | 1 | - | | | | | |
| | 29 | SPACE | 1 | - | | | | | 30 | SPACE | 1 | - | | | | | |
| | 31 | SPACE | 1 | - | | | | | 32 | SPACE | 1 | - | | | | | |
| | 33 | SPACE | 1 | - | | | | | 34 | SPACE | 1 | - | | | | | |
| | 35 | SPACE | 1 | - | | | | | 36 | SPACE | 1 | - | | | | | |
| | 37 | SPACE | 1 | - | | | | | 38 | SPACE | 1 | - | | | | | |
| | 39 | SPACE | 1 | - | | | | | 40 | SPACE | 1 | - | | | | | |
| | 41 | SPACE | 1 | - | | | | | 42 | SPACE | 1 | - | | | | | |

TOTAL CONNECTED LOAD 37.3 KVA — KVA PER PHASE: A 15.1 B 12.36 C 9.8

## PANEL PC2A

VOLTAGE:208/120 - 3P,4W — MOUNTING: RECESSED — LOCATION:

100 AMPERE BUS | 100 A MCB | 200% RATED NEUTRAL BUS | 10,000 A.I.C.

| CONN | | | BREAKER | | CIRCUIT WIRING | | | | | | BREAKER | | CIRCUIT WIRING | | | | CONN |
|---|---|---|---|---|---|---|---|---|---|---|---|---|---|---|---|---|---|
| KVA | CKT | DESCRIPTION | P | AMPS | NO | SIZE | GND | C | CKT | DESCRIPTION | P | AMPS | NO | SIZE | GND | C | KVA |
| 0.8 | 1 | BLDG SUPER | 1 | 20 | 2 | 12 | 12 | 3/4 | 2 | CLASSROOM | 1 | 20 | 2 | 12 | 12 | 3/4 | 1.2 |
| 0.8 | 3 | BLDG SUPER | 1 | 20 | 2 | 12 | 12 | 3/4 | 4 | CLASSROOM | 1 | 20 | 2 | 12 | 12 | 3/4 | 0.8 |
| 1.0 | 5 | BLDG SUPER | 1 | 20 | 2 | 12 | 12 | 3/4 | 6 | CLASSROOM | 1 | 20 | 2 | 12 | 12 | 3/4 | 1.2 |
| 1.0 | 7 | COPIER | 1 | 20 | 2 | 12 | 12 | 3/4 | 8 | CLASSROOM | 1 | 20 | 2 | 12 | 12 | 3/4 | 0.8 |
| 0.4 | 9 | EXERCISE TV | 1 | 20 | 2 | 12 | 12 | 3/4 | 10 | CLASSROOM | 1 | 20 | 2 | 12 | 12 | 3/4 | 0.5 |
| | 11 | SPARE | 1 | 20 | | | | | 12 | CLASSROOM | 1 | 20 | 2 | 12 | 12 | 3/4 | 0.8 |
| 0.4 | 13 | EXERCISE TV | 1 | 20 | 2 | 12 | 12 | 3/4 | 14 | RACES | 2 | 20 | 3 | 12 | 12 | 3/4 | 0.5 |
| 0.4 | 15 | EXERCISE | 1 | 20 | 2 | 12 | 12 | 3/4 | 16 | – | - | - | - | - | - | - | 0.5 |
| 0.8 | 17 | OFFICE | 1 | 20 | 2 | 12 | 12 | 3/4 | 18 | ? | 1 | 20 | 2 | 12 | 12 | 3/4 | 0.5 |
| 1.0 | 19 | A/V RACK | 1 | 20 | 2 | 12 | 12 | 3/4 | 20 | SPACE | 1 | - | | | | | |
| 0.6 | 21 | CLASSROOM | 1 | 20 | 2 | 12 | 12 | 3/4 | 22 | SPACE | 1 | - | | | | | |
| 0.6 | 23 | CLASSROOM | 1 | 20 | 2 | 12 | 12 | 3/4 | 24 | SPACE | 1 | - | | | | | |
| 0.4 | 25 | CLASSROOM | 1 | 20 | 2 | 12 | 12 | 3/4 | 26 | SPACE | 1 | - | | | | | |
| 0.8 | 27 | CLASSROOM | 1 | 20 | 2 | 12 | 12 | 3/4 | 28 | SPACE | 1 | - | | | | | |
| 1.2 | 29 | CLASSROOM | 1 | 20 | 2 | 12 | 12 | 3/4 | 30 | SPACE | 1 | - | | | | | |
| 1.2 | 31 | CLASSROOM | 1 | 20 | 2 | 12 | 12 | 3/4 | 32 | SPACE | 1 | - | | | | | |
| 1.2 | 33 | CLASSROOM | 1 | 20 | 2 | 12 | 12 | 3/4 | 34 | SPACE | 1 | - | | | | | |
| 1.2 | 35 | CLASSROOM | 1 | 20 | 2 | 12 | 12 | 3/4 | 36 | SPACE | 1 | - | | | | | |
| 1.2 | 37 | CLASSROOM | 1 | 20 | 2 | 12 | 12 | 3/4 | 38 | SPACE | 1 | - | | | | | |
| 1.2 | 39 | CLASSROOM | 1 | 20 | 2 | 12 | 12 | 3/4 | 40 | SPACE | 1 | - | | | | | |
| 0.4 | 41 | CLASSROOM | 1 | 20 | 2 | 12 | 12 | 3/4 | 42 | SPACE | 1 | - | | | | | |

TOTAL CONNECTED LOAD 23.4 KVA — KVA PER PHA A 8.5 B 7.2 C 7.7

## PANEL PR2B

VOLTAGE:208/120 - 3P,4W — MOUNTING: RECESSED — LOCATION:

100 AMPERE BUS | 100 A MCB | 100% RATED NEUTRAL BUS | 10,000 A.I.C.

| CONN | | | BREAKER | | CIRCUIT WIRING | | | | | | BREAKER | | CIRCUIT WIRING | | | | CONN |
|---|---|---|---|---|---|---|---|---|---|---|---|---|---|---|---|---|---|
| KVA | CKT | DESCRIPTION | P | AMPS | NO | SIZE | GND | C | CKT | DESCRIPTION | P | AMPS | NO | SIZE | GND | C | KVA |
| 1.6 | 1 | CORRIDOR | 1 | 20 | 2 | 12 | 12 | 3/4 | 2 | SPACE | 1 | - | | | | | |
| 1.2 | 3 | CORRIDOR | 1 | 20 | 2 | 12 | 12 | 3/4 | 4 | SPACE | 1 | - | | | | | |
| 1.2 | 5 | MEDIA ROOM | 1 | 20 | 2 | 12 | 12 | 3/4 | 6 | SPACE | 1 | - | | | | | |
| 1.5 | 7 | COFFEE | 1 | 20 | 2 | 12 | 12 | 3/4 | 8 | SPACE | 1 | - | | | | | |
| 1.5 | 9 | COFFEE | 1 | 20 | 2 | 12 | 12 | 3/4 | 10 | SPACE | 1 | - | | | | | |
| 1.5 | 11 | COFFEE | 1 | 20 | 2 | 12 | 12 | 3/4 | 12 | SPACE | 1 | - | | | | | |
| 1.0 | 13 | COFFEE | 1 | 20 | 2 | 12 | 12 | 3/4 | 14 | SPACE | 1 | - | | | | | |
| 1.4 | 15 | CORRIDOR | 1 | 20 | 2 | 12 | 12 | 3/4 | 16 | SPACE | 1 | - | | | | | |
| 0.2 | 17 | EOC | 1 | 20 | 2 | 12 | 12 | 3/4 | 18 | SPACE | 1 | - | | | | | |
| 0.4 | 19 | EOC | 1 | 20 | 2 | 12 | 12 | 3/4 | 20 | SPACE | 1 | - | | | | | |
| | 21 | SPARE | 1 | 20 | | | | | 22 | SPACE | 1 | - | | | | | |
| 0.2 | 23 | EOC | 1 | 20 | 2 | 12 | 12 | 3/4 | 24 | SPACE | 1 | - | | | | | |
| | 25 | SPARE | 1 | 20 | | | | | 26 | SPACE | 1 | - | | | | | |
| | 27 | SPARE | 1 | 20 | | | | | 28 | SPACE | 1 | - | | | | | |
| 0.2 | 29 | EOC | 1 | 20 | 2 | 12 | 12 | 3/4 | 30 | SPACE | 1 | - | | | | | |
| 0.2 | 31 | EOC | 1 | 20 | 2 | 12 | 12 | 3/4 | 32 | SPACE | 1 | - | | | | | |
| | 33 | SPARE | 1 | 20 | | | | | 34 | SPACE | 1 | - | | | | | |
| | 35 | SPARE | 1 | 20 | | | | | 36 | SPACE | 1 | - | | | | | |
| | 37 | SPARE | 1 | 20 | | | | | 38 | SPACE | 1 | - | | | | | |
| | 39 | SPARE | 1 | 20 | | | | | 40 | SPACE | 1 | - | | | | | |
| | 41 | SPARE | 1 | 20 | | | | | 42 | SPACE | 1 | - | | | | | |

TOTAL CONNECTED LOAD 12.1 KVA — KVA PER PHA A 4.7 B 4.1 C 3.3

## PANEL PR1

*GFCI BREAKER

VOLTAGE: 208/120V,3P,4W — MOUNTING: SURFACE — LOCATION: GENSET ROOM

100 AMPERE BUS | 100 A MCB | 100% RATED NEUTRAL BUS | 10,000 A.I.C.

| CONN | | | BREAKER | | CIRCUIT WIRING | | | | | | BREAKER | | CIRCUIT WIRING | | | | CONN |
|---|---|---|---|---|---|---|---|---|---|---|---|---|---|---|---|---|---|
| KVA | CKT | DESCRIPTION | P | AMPS | NO | SIZE | GND | C | CKT | DESCRIPTION | P | AMPS | NO | SIZE | GND | C | KVA |
| 1.8 | 1 | CORRIDOR | 1 | 20 | 2 | 12 | 12 | 3/4 | 2 | ATC | 1 | 20 | 2 | 12 | 12 | 3/4 | 0.5 |
| 1.6 | 3 | ELECTRICAL ROOM | 1 | 20 | 2 | 12 | 12 | 3/4 | 4 | ATC | 1 | 20 | 2 | 12 | 12 | 3/4 | 0.5 |
| 1.4 | 5 | UPS ROOM | 1 | 20 | 2 | 12 | 12 | 3/4 | 6 | ATC | 1 | 20 | 2 | 12 | 12 | 3/4 | 0.5 |
| 1.2 | 7 | MECH ROOM | 1 | 20 | 2 | 12 | 12 | 3/4 | 8 | OIL MINDER | 1 | 20 | 2 | 12 | 12 | 3/4 | 0.5 |
| | 9 | SPARE | 1 | 20 | | | | | 10 | GEO VAULT | 1 | 20* | 2 | 12 | 12 | 3/4 | 1.0 |
| | 11 | SPARE | 1 | 20 | | | | | 12 | OIL DETECTION | 1 | 20 | 2 | 10 | 10 | 1 | 0.2 |
| | 13 | SPARE | 1 | 20 | | | | | 14 | GENSET #1 | - | - | - | - | - | - | 2.0 |
| | 15 | SPARE | 1 | 20 | | | | | 16 | – | - | - | - | - | - | - | 2.0 |
| | 17 | SPARE | 1 | 20 | | | | | 18 | GENERATOR PANEL | 3 | 60 | 4 | 2 | 8 | 2 | 2.0 |
| | 19 | SPARE | 1 | 20 | | | | | 20 | GENSET #2 | - | - | - | - | - | - | 2.0 |
| | 21 | SPARE | 1 | 20 | | | | | 22 | – | - | - | - | - | - | - | 2.0 |
| | 23 | SPACE | 1 | - | | | | | 24 | GENERATOR PANEL | 3 | 60 | 4 | 2 | 8 | 2 | 2.0 |
| | 25 | SPACE | 1 | - | | | | | 26 | GENSET #3 | - | - | - | - | - | - | 2.0 |
| | 27 | SPACE | 1 | - | | | | | 28 | – | - | - | - | - | - | - | 2.0 |
| | 29 | SPACE | 1 | - | | | | | 30 | SPACE | 1 | - | | | | | |
| | 31 | SPACE | 1 | - | | | | | 32 | SPACE | 1 | - | | | | | |
| | 33 | SPACE | 1 | - | | | | | 34 | SPACE | 1 | - | | | | | |
| | 35 | SPACE | 1 | - | | | | | 36 | SPACE | 1 | - | | | | | |
| | 37 | SPACE | 1 | - | | | | | 38 | SPACE | 1 | - | | | | | |
| | 39 | SPACE | 1 | - | | | | | 40 | SPACE | 1 | - | | | | | |
| | 41 | SPACE | 1 | - | | | | | 42 | SPACE | 1 | - | | | | | |

TOTAL CONNECTED LOAD 25.2 KVA — KVA PER PHASE: A 10 B 9.1 C 6.1

## PANEL PC2B

VOLTAGE:208/120 - 3P,4W — MOUNTING: RECESSED — LOCATION:

100 AMPERE BUS | 100 A MCB | 200% RATED NEUTRAL BUS | 10,000 A.I.C.

| CONN | | | BREAKER | | CIRCUIT WIRING | | | | | | BREAKER | | CIRCUIT WIRING | | | | CONN |
|---|---|---|---|---|---|---|---|---|---|---|---|---|---|---|---|---|---|
| KVA | CKT | DESCRIPTION | P | AMPS | NO | SIZE | GND | C | CKT | DESCRIPTION | P | AMPS | NO | SIZE | GND | C | KVA |
| 0.8 | 1 | EOC OFF | 1 | 20 | 2 | 12 | 12 | 3/4 | 2 | TR OFFICE | 1 | 20 | 2 | 12 | 12 | 3/4 | 0.8 |
| 0.8 | 3 | EOC OFF | 1 | 20 | 2 | 12 | 12 | 3/4 | 4 | TR OFFICE | 1 | 20 | 2 | 12 | 12 | 3/4 | 0.8 |
| 0.8 | 5 | EOC OFF | 1 | 20 | 2 | 12 | 12 | 3/4 | 6 | TR OFFICE | 1 | 20 | 2 | 12 | 12 | 3/4 | 1.0 |
| 0.8 | 7 | EOC OFF | 1 | 20 | 2 | 12 | 12 | 3/4 | 8 | SPARE | 1 | 20 | | | | | |
| 0.6 | 9 | COPY | 1 | 20 | 2 | 12 | 12 | 3/4 | 10 | SPARE | 1 | 20 | | | | | |
| 0.8 | 11 | EOC OFF | 1 | 20 | 2 | 12 | 12 | 3/4 | 12 | SPARE | 1 | 20 | | | | | |
| 1.0 | 13 | WORKGROUP | 1 | 20 | 2 | 12 | 12 | 3/4 | 14 | SPARE | 1 | 20 | | | | | |
| 0.8 | 15 | CHAPLAIN | 1 | 20 | 2 | 12 | 12 | 3/4 | 16 | SPARE | 1 | 20 | | | | | |
| 0.8 | 17 | PIO OFFICE | 1 | 20 | 2 | 12 | 12 | 3/4 | 18 | SPACE | 1 | - | | | | | |
| 1.2 | 19 | MEDIA | 1 | 20 | 2 | 12 | 12 | 3/4 | 20 | SPACE | 1 | - | | | | | |
| 0.8 | 21 | MEDIA | 1 | 20 | 2 | 12 | 12 | 3/4 | 22 | SPACE | 1 | - | | | | | |
| 0.8 | 23 | MEDIA | 1 | 20 | 2 | 12 | 12 | 3/4 | 24 | SPACE | 1 | - | | | | | |
| 0.8 | 25 | PIO | 1 | 20 | 2 | 12 | 12 | 3/4 | 26 | SPACE | 1 | - | | | | | |
| 0.6 | 27 | PIO | 1 | 20 | 2 | 12 | 12 | 3/4 | 28 | SPACE | 1 | - | | | | | |
| 0.6 | 29 | PIO | 1 | 20 | 2 | 12 | 12 | 3/4 | 30 | SPACE | 1 | - | | | | | |
| 0.8 | 31 | PIO | 1 | 20 | 2 | 12 | 12 | 3/4 | 32 | SPACE | 1 | - | | | | | |
| 0.6 | 33 | PIO | 1 | 20 | 2 | 12 | 12 | 3/4 | 34 | SPACE | 1 | - | | | | | |
| 0.8 | 35 | RECEPT | 1 | 20 | 2 | 12 | 12 | 3/4 | 36 | SPACE | 1 | - | | | | | |
| 1.0 | 37 | LOBBY | 1 | 20 | 2 | 12 | 12 | 3/4 | 38 | SPACE | 1 | - | | | | | |
| 0.8 | 39 | TR OFFICE | 1 | 20 | 2 | 12 | 12 | 3/4 | 40 | SPACE | 1 | - | | | | | |
| 0.8 | 41 | TR OFFICE | 1 | 20 | 2 | 12 | 12 | 3/4 | 42 | SPACE | 1 | - | | | | | |

TOTAL CONNECTED LOAD 19.4 KVA — KVA PER PHA: A 7.2 B 5.8 C 6.4

## PANEL PL3

VOLTAGE: 480/277V,3P,4W — MOUNTING: SURFACE — LOCATION: GENSET ROOM

225 AMPERE BUS | 225 A MCB | 100% RATED NEUTRAL BUS | 50,000 A.I.C.

| CONN | | | BREAKER | | CIRCUIT WIRING | | | | | | BREAKER | | CIRCUIT WIRING | | | | CONN |
|---|---|---|---|---|---|---|---|---|---|---|---|---|---|---|---|---|---|
| KVA | CKT | DESCRIPTION | P | AMPS | NO | SIZE | GND | C | CKT | DESCRIPTION | P | AMPS | NO | SIZE | GND | C | KVA |
| 13.5 | 1 | PANEL PR3A | REFER TO XFMR SCHEDULE | | | | | | 2 | PANEL PR3B | REFER TO XFMR SCHEDULE | | | | | | 8.6 |
| 17.0 | 3 | VIA XFMR | - | - | - | - | - | - | 4 | VIA XFMR | - | - | - | - | - | - | 7.3 |
| 16.5 | 5 | TPR3 | - | - | - | - | - | - | 6 | TPR1 | - | - | - | - | - | - | 7.2 |
| 4.6 | 7 | PANEL PC3A | REFER TO XFMR SCHEDULE | | | | | | 8 | PANEL PC3B | REFER TO XFMR SCHEDULE | | | | | | 5.0 |
| 4.2 | 9 | VIA XFMR | - | - | - | - | - | - | 10 | VIA XFMR | - | - | - | - | - | - | 4.2 |
| 4.6 | 11 | TPR1 | - | - | - | - | - | - | 12 | TPR1 | - | - | - | - | - | - | 4.2 |
| 3.1 | 13 | LTG-200-206,234-242 | 1 | 20 | 2 | 12 | 12 | 3/4 | 14 | SPACE | 1 | - | | | | | |
| 2.2 | 15 | LTG-200-206,234-242 | 1 | 20 | 2 | 12 | 12 | 3/4 | 16 | SPACE | 1 | - | | | | | |
| 1.8 | 17 | LTG-207-209,244,227-228 | 1 | 20 | 2 | 12 | 12 | 3/4 | 18 | SPACE | 1 | - | | | | | |
| 3.2 | 19 | LTG-218,225,226 | 1 | 20 | 2 | 12 | 12 | 3/4 | 20 | SPACE | 1 | - | | | | | |
| 2.5 | 21 | LTG-210-217,221 | 1 | 20 | 2 | 12 | 12 | 3/4 | 22 | SPACE | 1 | - | | | | | |
| 2.0 | 23 | LTG-220 | 1 | 20 | 2 | 12 | 12 | 3/4 | 24 | SPACE | 1 | - | | | | | |
| | 25 | SPARE | 1 | 20 | | | | | 26 | SPACE | 1 | - | | | | | |
| | 27 | SPARE | 1 | 20 | | | | | 28 | SPACE | 1 | - | | | | | |
| | 29 | SPARE | 1 | 20 | | | | | 30 | SPACE | 1 | - | | | | | |
| | 31 | SPARE | 1 | 20 | | | | | 32 | SPACE | 1 | - | | | | | |
| | 33 | SPARE | 1 | 20 | | | | | 34 | SPACE | 1 | - | | | | | |
| | 35 | SPACE | 1 | - | | | | | 36 | SPACE | 1 | - | | | | | |
| | 37 | SPACE | 1 | - | | | | | 38 | SPACE | 1 | - | | | | | |
| | 39 | SPACE | 1 | - | | | | | 40 | SPACE | 1 | - | | | | | |
| | 41 | SPACE | 1 | - | | | | | 42 | SPACE | 1 | - | | | | | |

TOTAL CONNECTED LOAD 111.7 KVA — KVA PER PHASE: A 38 B 37.4 C 36.3

## PANEL PL2

VOLTAGE: 480/277V,3P,4W — MOUNTING: SURFACE — LOCATION: GENSET ROOM

225 AMPERE BUS | 225 A MCB | 100% RATED NEUTRAL BUS | 50,000 A.I.C.

| CONN | | | BREAKER | | CIRCUIT WIRING | | | | | | BREAKER | | CIRCUIT WIRING | | | | CONN |
|---|---|---|---|---|---|---|---|---|---|---|---|---|---|---|---|---|---|
| KVA | CKT | DESCRIPTION | P | AMPS | NO | SIZE | GND | C | CKT | DESCRIPTION | P | AMPS | NO | SIZE | GND | C | KVA |
| 11.3 | 1 | PANEL PR2A | REFER TO XFMR SCHEDULE | | | | | | 2 | PANEL PR2B | REFER TO XFMR SCHEDULE | | | | | | 4.7 |
| 10.0 | 3 | VIA XFMR | - | - | - | - | - | - | 4 | VIA XFMR | - | - | - | - | - | - | 4.1 |
| 10.6 | 5 | TPR1 | - | - | - | - | - | - | 6 | TPR1 | - | - | - | - | - | - | 3.3 |
| 8.5 | 7 | PANEL PC2A | REFER TO XFMR SCHEDULE | | | | | | 8 | PANEL PC2B | REFER TO XFMR SCHEDULE | | | | | | 7.2 |
| 7.2 | 9 | VIA XFMR | - | - | - | - | - | - | 10 | VIA XFMR | - | - | - | - | - | - | 5.8 |
| 7.7 | 11 | TPR1 | - | - | - | - | - | - | 12 | TPR1 | - | - | - | - | - | - | 6.4 |
| 1.3 | 13 | LTG-146-149,101-102 | 1 | 20 | 2 | 12 | 12 | 3/4 | 14 | LTG-158 | 1 | 20 | 2 | 12 | 12 | 3/4 | 2.6 |
| 4.0 | 15 | LTG-150,152-156,165,167-172 | 1 | 20 | 2 | 12 | 12 | 3/4 | 16 | SPACE | 1 | - | | | | | |
| 0.8 | 17 | LTG-C-1.4 | 1 | 20 | 2 | 12 | 12 | 3/4 | 18 | SPACE | 1 | - | | | | | |
| 1.5 | 19 | LTG-C-1.3,126,117,118 | 1 | 20 | 2 | 12 | 12 | 3/4 | 20 | SPACE | 1 | - | | | | | |
| 0.8 | 21 | LTG-C1.1,C1.2 | 1 | 20 | 2 | 12 | 12 | 3/4 | 22 | SPACE | 1 | - | | | | | |
| 2.2 | 23 | LTG-137-144 | 1 | 20 | 2 | 12 | 12 | 3/4 | 24 | SPACE | 1 | - | | | | | |
| 0.8 | 25 | LTG-134,135,136 | 1 | 20 | 2 | 12 | 12 | 3/4 | 26 | SPACE | 1 | - | | | | | |
| 3.3 | 27 | LTG-116,119-133, 133A | 1 | 20 | 2 | 12 | 12 | 3/4 | 28 | SPACE | 1 | - | | | | | |
| 2.1 | 29 | LTG-104-112,114-115,159-162 | 1 | 20 | 2 | 12 | 12 | 3/4 | 30 | SPACE | 1 | - | | | | | |
| 3.6 | 31 | LTG-151 | 1 | 20 | 2 | 12 | 12 | 3/4 | 32 | SPACE | 1 | - | | | | | |
| | 33 | SPARE | 1 | 20 | | | | | 34 | SPACE | 1 | - | | | | | |
| | 35 | SPARE | 1 | 20 | | | | | 36 | SPACE | 1 | - | | | | | |
| | 37 | SPARE | 1 | 20 | | | | | 38 | SPACE | 1 | - | | | | | |
| | 39 | SPARE | 1 | 20 | | | | | 40 | SPACE | 1 | - | | | | | |
| | 41 | SPARE | 1 | 20 | | | | | 42 | SPACE | 1 | - | | | | | |

TOTAL CONNECTED LOAD 109.8 KVA — KVA PER PHASE: A 41.5 B 35.2 C 33.1

## PANEL PR2A

(SECTION I)

VOLTAGE:208/120 - 3P,4W — MOUNTING: RECESSED — LOCATION:

100 AMPERE BUS | 100 A MCB | 100% RATED NEUTRAL BUS | 10,000 A.I.C.

| CONN | | | BREAKER | | CIRCUIT WIRING | | | | | | BREAKER | | CIRCUIT WIRING | | | | CONN |
|---|---|---|---|---|---|---|---|---|---|---|---|---|---|---|---|---|---|
| KVA | CKT | DESCRIPTION | P | AMPS | NO | SIZE | GND | C | CKT | DESCRIPTION | P | AMPS | NO | SIZE | GND | C | KVA |
| 1.2 | 1 | STORAGE | 1 | 20 | 2 | 12 | 12 | 3/4 | 2 | REFRIGERATOR | 1 | 20 | 2 | 12 | 12 | 3/4 | 1.0 |
| 1.6 | 3 | CORRIDOR AND KITCH | 1 | 20 | 2 | 12 | 12 | 3/4 | 4 | MICROWAVE | 1 | 20 | 2 | 12 | 12 | 3/4 | 1.4 |
| 0.4 | 5 | BATHROOM | 1 | 20 | 2 | 12 | 12 | 3/4 | 6 | RECEPTACLE | 1 | 20 | 2 | 12 | 12 | 3/4 | 1.0 |
| 1.4 | 7 | MEN'S BUNK | 1 | 20 | 2 | 12 | 12 | 3/4 | 8 | VENDING MACHINE | 1 | 20 | 2 | 12 | 12 | 3/4 | 1.0 |
| 1.4 | 9 | CORRIDOR | 1 | 20 | 2 | 12 | 12 | 3/4 | 10 | RECEPTACLE | 1 | 20 | 2 | 12 | 12 | 3/4 | 1.0 |
| 0.5 | 11 | WATER COOLER | 1 | 20 | 2 | 12 | 12 | 3/4 | 12 | REFRIGERATOR | 1 | 20 | 2 | 12 | 12 | 3/4 | 1.0 |
| 1.4 | 13 | MEN'S BUNK | 1 | 20 | 2 | 12 | 12 | 3/4 | 14 | RECEPTACLE | 1 | 20 | 2 | 12 | 12 | 3/4 | 0.4 |
| 0.6 | 15 | WASHER | 1 | 20 | 2 | 12 | 12 | 3/4 | 16 | FREEZER | 1 | 20 | 2 | 12 | 12 | 3/4 | 1.0 |
| 1.5 | 17 | DRYER | 2 | 30 | 3 | 10 | 10 | 3/4 | 18 | MICROWAVE | 1 | 20 | 2 | 12 | 12 | 3/4 | 1.4 |
| 1.5 | 19 | -- | - | - | - | - | - | - | 20 | JUNCTION BOX | 1 | 20 | 2 | 12 | 12 | 3/4 | 0.2 |
| 0.8 | 21 | DINING | 1 | 20 | 2 | 12 | 12 | 3/4 | 22 | H-1 | 1 | 20 | 2 | 12 | 12 | 3/4 | 0.6 |
| 1.4 | 23 | WOMEN'S BUNK | 1 | 20 | 2 | 12 | 12 | 3/4 | 24 | RANGE | 3 | 40 | 3 | 8 | 10 | 3/4 | 2.0 |
| 0.6 | 25 | EXERCISE | 1 | 20 | 2 | 12 | 12 | 3/4 | 26 | – | 1 | - | - | - | - | | 2.0 |
| 0.8 | 27 | EXERCISE | 1 | 20 | 2 | 12 | 12 | 3/4 | 28 | RECEPTACLE | 1 | 20 | 2 | 12 | 12 | 3/4 | 0.4 |
| 1.0 | 29 | DOOR | 1 | 20 | 2 | 12 | 12 | 3/4 | 30 | SPACE | 1 | - | | | | | |
| 0.6 | 31 | EXTERIOR | 1 | 20 | 2 | 12 | 12 | 3/4 | 32 | SPACE | 1 | - | | | | | |
| 0.2 | 33 | PODIUM | 1 | 20 | 2 | 12 | 12 | 3/4 | 34 | SPACE | 1 | - | | | | | |
| 0.2 | 35 | EOC | 1 | 20 | 2 | 12 | 12 | 3/4 | 36 | SPACE | 1 | - | | | | | |
| | 37 | SPARE | 1 | 20 | | | | | 38 | SPACE | 1 | - | | | | | |
| 0.2 | 39 | EOC | 1 | 20 | 2 | 12 | 12 | 3/4 | 40 | SPACE | 1 | - | | | | | |
| 0.2 | 41 | SPARE | 1 | 20 | | | | | 42 | SPACE | 1 | - | | | | | |

TOTAL CONNECTED LOAD 31.9 KVA — KVA PER PHASE: A 11.3 B 10 C 10.6

| | | |
|---|---|---|
| PL1 | PC2A | PR2B |
| PR1 | PC2B | PL3 |
| PL2 | PR2A | |


EDMEADES & STROMDAHL, LTD.
11 North Main Street
Phone: 410.879.0388
E-mail: lhyde@eslarch.com
Bel Air, Maryland 21014
Fax: 410.879.4785

Gipe Associates Inc.
Consulting Engineers
849 Fairmount Ave Suite 102
Baltimore, Maryland 21286
P (410)832-2420
F (410)832-2418
Easton, Maryland
W.O.# 08095


PANEL SCHEDULES III

**HARFORD COUNTY E.O.C.**
**PHASE 1 COMMUNICATIONS BUILDING**
2220 ADY ROAD
FOREST HILL, MD 21050

COPYRIGHTED EDMEADES & STROMDAHL, LTD. 2008

Job No: 07033

Date: DEC. 18, 2012

Rev: 2 2/15/13-ADD #2

BID DOCUMENTS

Sheet No. EA8.3

STROMDAHL

EDMEADES

## PANEL PC3A

MOUNTING: RECESSED
VOLTAGE:208/120 - 3P,4W
LOCATION:
100 AMPERE BUS | 100 A MCB | 200% RATED NEUTRAL BUS | 10,000 A.I.C.

| CONN KVA | CKT | DESCRIPTION | BREAKER P | BREAKER AMPS | CIRCUIT WIRING NO | SIZE | GND | C | CKT | DESCRIPTION | BREAKER P | BREAKER AMPS | CIRCUIT WIRING NO | SIZE | GND | C | CONN KVA |
|---|---|---|---|---|---|---|---|---|---|---|---|---|---|---|---|---|---|
| 0.8 | 1 | TECH SERVICES | 1 | 20 | 2 | 12 | 12 | 3/4 | 2 | SPACE | 1 | - | | | | | |
| 0.8 | 3 | TECH SERVICES | 1 | 20 | 2 | 12 | 12 | 3/4 | 4 | SPACE | 1 | - | | | | | |
| 0.8 | 5 | TECH SERVICES | 1 | 20 | 2 | 12 | 12 | 3/4 | 6 | SPACE | 1 | - | | | | | |
| 0.8 | 7 | TECH SERVICES | 1 | 20 | 2 | 12 | 12 | 3/4 | 8 | SPACE | 1 | - | | | | | |
| 0.4 | 9 | TECH SERVICES PRINTER | 1 | 20 | 2 | 12 | 12 | 3/4 | 10 | SPACE | 1 | - | | | | | |
| 0.6 | 11 | COMPUTER BUILD | 1 | 20 | 2 | 12 | 12 | 3/4 | 12 | SPACE | 1 | - | | | | | |
| 0.6 | 13 | COMPUTER BUILD | 1 | 20 | 2 | 12 | 12 | 3/4 | 14 | SPACE | 1 | - | | | | | |
| 0.8 | 15 | COMPUTER BUILD | 1 | 20 | 2 | 12 | 12 | 3/4 | 16 | SPACE | 1 | - | | | | | |
| 1.0 | 17 | TECH SERVICES SUPER | 1 | 20 | 2 | 12 | 12 | 3/4 | 18 | SPACE | 1 | - | | | | | |
| 1.0 | 19 | TECH SERVICES SUPER | 1 | 20 | 2 | 12 | 12 | 3/4 | 20 | SPACE | 1 | - | | | | | |
| 1.0 | 21 | TECH SERVICES SUPER | 1 | 20 | 2 | 12 | 12 | 3/4 | 22 | SPACE | 1 | - | | | | | |
| 0.8 | 23 | TECH SERVICES MGR | 1 | 20 | 2 | 12 | 12 | 3/4 | 24 | SPACE | 1 | - | | | | | |
| 0.8 | 25 | TECH SERVICES MGR | 1 | 20 | 2 | 12 | 12 | 3/4 | 26 | SPACE | 1 | - | | | | | |
| 0.8 | 27 | OFFICE | 1 | 20 | 2 | 12 | 12 | 3/4 | 28 | SPACE | 1 | - | | | | | |
| 0.8 | 29 | ROLL CALL | 1 | 20 | 2 | 12 | 12 | 3/4 | 30 | SPACE | 1 | - | | | | | |
| 0.6 | 31 | KITCHEN | 1 | 20 | 2 | 12 | 12 | 3/4 | 32 | SPACE | 1 | - | | | | | |
| 0.4 | 33 | KITCHEN | 1 | 20 | 2 | 12 | 12 | 3/4 | 34 | SPACE | 1 | - | | | | | |
| 0.6 | 35 | ROLL CALL | 1 | 20 | 2 | 12 | 12 | 3/4 | 36 | SPACE | 1 | - | | | | | |
| | 37 | SPARE | 1 | 20 | | | | | 38 | SPACE | 1 | - | | | | | |
| | 39 | SPARE | 1 | 20 | | | | | 40 | SPACE | 1 | - | | | | | |
| | 41 | SPARE | 1 | 20 | | | | | 42 | SPACE | 1 | - | | | | | |

TOTAL CONNECTED LOAD 13.4 KVA | KVA PER PHA: A 4.6 B 4.2 C 4.6

## PANEL PC3B

MOUNTING: RECESSED
VOLTAGE:208/120 - 3P,4W
LOCATION:
100 AMPERE BUS | 100 A MCB | 200% RATED NEUTRAL BUS | 10,000 A.I.C.

| CONN KVA | CKT | DESCRIPTION | BREAKER P | BREAKER AMPS | CIRCUIT WIRING NO | SIZE | GND | C | CKT | DESCRIPTION | BREAKER P | BREAKER AMPS | CIRCUIT WIRING NO | SIZE | GND | C | CONN KVA |
|---|---|---|---|---|---|---|---|---|---|---|---|---|---|---|---|---|---|
| 0.6 | 1 | CONFERENCE | 1 | 20 | 2 | 12 | 12 | 3/4 | 2 | SPACE | 1 | - | | | | | |
| 0.8 | 3 | CONFERENCE | 1 | 20 | 2 | 12 | 12 | 3/4 | 4 | SPACE | 1 | - | | | | | |
| 0.8 | 5 | CONFERENCE | 1 | 20 | 2 | 12 | 12 | 3/4 | 6 | SPACE | 1 | - | | | | | |
| 1.2 | 7 | MANAGER | 1 | 20 | 2 | 12 | 12 | 3/4 | 8 | SPACE | 1 | - | | | | | |
| 1.0 | 9 | DEPT MANAGER | 1 | 20 | 2 | 12 | 12 | 3/4 | 10 | SPACE | 1 | - | | | | | |
| 1.2 | 11 | DEPT MANAGER | 1 | 20 | 2 | 12 | 12 | 3/4 | 12 | SPACE | 1 | - | | | | | |
| 1.0 | 13 | HR MANAGER | 1 | 20 | 2 | 12 | 12 | 3/4 | 14 | SPACE | 1 | - | | | | | |
| 1.0 | 15 | FINANCE MANAGER | 1 | 20 | 2 | 12 | 12 | 3/4 | 16 | SPACE | 1 | - | | | | | |
| 0.8 | 17 | ADMIN ASST | 1 | 20 | 2 | 12 | 12 | 3/4 | 18 | SPACE | 1 | - | | | | | |
| 0.8 | 19 | ADMIN ASST | 1 | 20 | 2 | 12 | 12 | 3/4 | 20 | SPACE | 1 | - | | | | | |
| 0.8 | 21 | FINANCE OFFICE | 1 | 20 | 2 | 12 | 12 | 3/4 | 22 | SPACE | 1 | - | | | | | |
| 0.6 | 23 | FINANCE OFFICE | 1 | 20 | 2 | 12 | 12 | 3/4 | 24 | SPACE | 1 | - | | | | | |
| 0.6 | 25 | FINANCE OFFICE | 1 | 20 | 2 | 12 | 12 | 3/4 | 26 | SPACE | 1 | - | | | | | |
| 0.6 | 27 | FINANCE OFFICE | 1 | 20 | 2 | 12 | 12 | 3/4 | 28 | SPACE | 1 | - | | | | | |
| 0.8 | 29 | RECORDS CLERK | 1 | 20 | 2 | 12 | 12 | 3/4 | 30 | SPACE | 1 | - | | | | | |
| 0.8 | 31 | RECORDS CLERK | 1 | 20 | 2 | 12 | 12 | 3/4 | 32 | SPACE | 1 | - | | | | | |
| | 33 | SPARE | 1 | 20 | | | | | 34 | SPACE | 1 | - | | | | | |
| | 35 | SPARE | 1 | 20 | | | | | 36 | SPACE | 1 | - | | | | | |
| | 37 | SPARE | 1 | 20 | | | | | 38 | SPACE | 1 | - | | | | | |
| | 39 | SPARE | 1 | 20 | | | | | 40 | SPACE | 1 | - | | | | | |
| | 41 | SPARE | 1 | 20 | | | | | 42 | SPACE | 1 | - | | | | | |

TOTAL CONNECTED LOAD 13.4 KVA | KVA PER PHAS A 5 B 4.2 C 4.2

## PANEL PR3B

MOUNTING: RECESSED
VOLTAGE:208/120 - 3P,4W
LOCATION:
100 AMPERE BUS | 100 A MCB | 100% RATED NEUTRAL BUS | 10,000 A.I.C.

| CONN KVA | CKT | DESCRIPTION | BREAKER P | BREAKER AMPS | CIRCUIT WIRING NO | SIZE | GND | C | CKT | DESCRIPTION | BREAKER P | BREAKER AMPS | CIRCUIT WIRING NO | SIZE | GND | C | CONN KVA |
|---|---|---|---|---|---|---|---|---|---|---|---|---|---|---|---|---|---|
| 1.0 | 1 | CORRIDOR | 1 | 20 | 2 | 12 | 12 | 3/4 | 2 | DISPATCH CONSOLE - 19 | 1 | 20 | 2 | 12 | 12 | 3/4 | 1.0 |
| 0.4 | 3 | TOILETS | 1 | 20 | 2 | 12 | 12 | 3/4 | 4 | DISPATCH CONSOLE - 20 | 1 | 20 | 2 | 12 | 12 | 3/4 | 1.0 |
| 0.4 | 5 | BREAK ROOM | 1 | 20 | 2 | 12 | 12 | 3/4 | 6 | DISPATCH CONSOLE - 21 | 1 | 20 | 2 | 12 | 12 | 3/4 | 1.0 |
| 0.6 | 7 | BREAK ROOM | 1 | 20 | 2 | 12 | 12 | 3/4 | 8 | DISPATCH CONSOLE - 22 | 1 | 20 | 2 | 12 | 12 | 3/4 | 1.0 |
| 0.5 | 9 | COPIER | 1 | 20 | 2 | 12 | 12 | 3/4 | 10 | DISPATCH CONSOLE - 23 | 1 | 20 | 2 | 12 | 12 | 3/4 | 1.0 |
| 0.8 | 11 | COPY ROOM | 1 | 20 | 2 | 12 | 12 | 3/4 | 12 | DISPATCH CONSOLE - 24 | 1 | 20 | 2 | 12 | 12 | 3/4 | 1.0 |
| 1.0 | 13 | CEN SUPPLY | 1 | 20 | 2 | 12 | 12 | 3/4 | 14 | DISPATCH CONSOLE - 25 | 1 | 20 | 2 | 12 | 12 | 3/4 | 1.0 |
| 0.4 | 15 | WATER COOLER | 1 | 20 | 2 | 12 | 12 | 3/4 | 16 | DISPATCH CONSOLE - 26 | 1 | 20 | 2 | 12 | 12 | 3/4 | 1.0 |
| | 17 | SPACE | | | | | | | 18 | DISPATCH CONSOLE - 27 | 1 | 20 | 2 | 12 | 12 | 3/4 | 1.0 |
| | 19 | SPACE | | | | | | | 20 | DISPATCH CONSOLE - 28 | 1 | 20 | 2 | 12 | 12 | 3/4 | 1.0 |
| | 21 | SPACE | | | | | | | 22 | DISPATCH CONSOLE - 29 | 1 | 20 | 2 | 12 | 12 | 3/4 | 1.0 |
| | 23 | SPACE | | | | | | | 24 | DISPATCH CONSOLE - 30 | 1 | 20 | 2 | 12 | 12 | 3/4 | 1.0 |
| | 25 | SPACE | | | | | | | 26 | DISPATCH CONSOLE - 31 | 1 | 20 | 2 | 12 | 12 | 3/4 | 1.0 |
| | 27 | SPACE | | | | | | | 28 | DISPATCH CONSOLE - 32 | 1 | 20 | 2 | 12 | 12 | 3/4 | 1.0 |
| | 29 | SPACE | | | | | | | 30 | DISPATCH CONSOLE - 33 | 1 | 20 | 2 | 12 | 12 | 3/4 | 1.0 |
| | 31 | SPACE | | | | | | | 32 | DISPATCH CONSOLE - 34 | 1 | 20 | 2 | 12 | 12 | 3/4 | 1.0 |
| | 33 | SPACE | | | | | | | 34 | DISPATCH CONSOLE - 35 | 1 | 20 | 2 | 12 | 12 | 3/4 | 1.0 |
| | 35 | SPACE | | | | | | | 36 | DISPATCH CONSOLE - 36 | 1 | 20 | 2 | 12 | 12 | 3/4 | 1.0 |
| | 37 | SPACE | | | | | | | 38 | SPARE | 1 | 20 | | | | | |
| | 39 | SPACE | | | | | | | 40 | SPARE | 1 | 20 | | | | | |
| | 41 | SPACE | | | | | | | 42 | SPARE | 1 | 20 | | | | | |

TOTAL CONNECTED LOAD 23.1 KVA | KVA PER PHASE: A 8.6 B 7.3 C 7.2

## PANEL PR3A (SECTION I)

MOUNTING:SURFACE
VOLTAGE:208/120
LOCATION:ELECTRICAL CLOSET 1309
225 AMPERE BUS | 225A MLO | 200% RATED NEUTRAL BUS | 10,000 A.I.C.

| CONN KVA | CKT | DESCRIPTION | BREAKER P | BREAKER AMPS | CIRCUIT WIRING NO | SIZE | GND | C | CKT | DESCRIPTION | BREAKER P | BREAKER AMPS | CIRCUIT WIRING NO | SIZE | GND | C | CONN KVA |
|---|---|---|---|---|---|---|---|---|---|---|---|---|---|---|---|---|---|
| 0.8 | 1 | TECH SERVICES | 1 | 20 | 2 | 12 | 12 | 3/4 | 2 | DISPATCH CONSOLE - 1 | 1 | 20 | 2 | 12 | 12 | 3/4 | 1.0 |
| 1.6 | 3 | CORRIDOR | 1 | 20 | 2 | 12 | 12 | 3/4 | 4 | DISPATCH CONSOLE - 2 | 1 | 20 | 2 | 12 | 12 | 3/4 | 1.0 |
| 1.4 | 5 | ARCHIVE STORAGE | 1 | 20 | 2 | 12 | 12 | 3/4 | 6 | DISPATCH CONSOLE - 3 | 1 | 20 | 2 | 12 | 12 | 3/4 | 1.0 |
| 0.4 | 7 | RESTROOM | 1 | 20 | 2 | 12 | 12 | 3/4 | 8 | DISPATCH CONSOLE - 4 | 1 | 20 | 2 | 12 | 12 | 3/4 | 1.0 |
| 0.5 | 9 | WATER COOLER | 1 | 20 | 2 | 12 | 12 | 3/4 | 10 | DISPATCH CONSOLE - 5 | 1 | 20 | 2 | 12 | 12 | 3/4 | 1.0 |
| 1.6 | 11 | TECH STORAGE | 1 | 20 | 2 | 12 | 12 | 3/4 | 12 | DISPATCH CONSOLE - 6 | 1 | 20 | 2 | 12 | 12 | 3/4 | 1.0 |
| 0.6 | 13 | TOILET ROOMS | 1 | 20 | 2 | 12 | 12 | 3/4 | 14 | DISPATCH CONSOLE - 7 | 1 | 20 | 2 | 12 | 12 | 3/4 | 1.0 |
| 1.0 | 15 | CORRIDOR | 1 | 20 | 2 | 12 | 12 | 3/4 | 16 | DISPATCH CONSOLE - 8 | 1 | 20 | 2 | 12 | 12 | 3/4 | 1.0 |
| 1.0 | 17 | ROOF | 1 | 20 | 2 | 12 | 12 | 3/4 | 18 | DISPATCH CONSOLE - 9 | 1 | 20 | 2 | 12 | 12 | 3/4 | 1.0 |
| 1.0 | 19 | MOTORIZED SHADES | 1 | 20 | 2 | 12 | 12 | 3/4 | 20 | DISPATCH CONSOLE - 10 | 1 | 20 | 2 | 12 | 12 | 3/4 | 1.0 |
| 1.0 | 21 | MOTORIZED SHADES | 1 | 20 | 2 | 12 | 12 | 3/4 | 22 | DISPATCH CONSOLE - 11 | 1 | 20 | 2 | 12 | 12 | 3/4 | 1.0 |
| 1.5 | 23 | U/V - ERV UNITS | 1 | 20 | 2 | 12 | 12 | 3/4 | 24 | DISPATCH CONSOLE - 12 | 1 | 20 | 2 | 12 | 12 | 3/4 | 1.0 |
| 1.0 | 25 | VENDING MACHINE | 1 | 20 | 2 | 12 | 12 | 3/4 | 26 | DISPATCH CONSOLE - 13 | 1 | 20 | 2 | 12 | 12 | 3/4 | 1.0 |
| 1.0 | 27 | VENDING MACHINE | 1 | 20 | 2 | 12 | 12 | 3/4 | 28 | DISPATCH CONSOLE - 14 | 1 | 20 | 2 | 12 | 12 | 3/4 | 1.0 |
| 1.0 | 29 | VENDING MACHINE | 1 | 20 | 2 | 12 | 12 | 3/4 | 30 | DISPATCH CONSOLE - 15 | 1 | 20 | 2 | 12 | 12 | 3/4 | 1.0 |
| 1.0 | 31 | REFRIGERATOR | 1 | 20 | 2 | 12 | 12 | 3/4 | 32 | DISPATCH CONSOLE - 16 | 1 | 20 | 2 | 12 | 12 | 3/4 | 1.0 |
| 1.0 | 33 | REFRIGERATOR | 1 | 20 | 2 | 12 | 12 | 3/4 | 34 | DISPATCH CONSOLE - 17 | 1 | 20 | 2 | 12 | 12 | 3/4 | 1.0 |
| 1.0 | 35 | REFRIGERATOR | 1 | 20 | 2 | 12 | 12 | 3/4 | 36 | DISPATCH CONSOLE - 18 | 1 | 20 | 2 | 12 | 12 | 3/4 | 1.0 |
| 0.5 | 37 | WATER DISPENSER | 1 | 20 | 2 | 12 | 12 | 3/4 | 38 | MICROWAVE | 1 | 20 | 2 | 12 | 12 | 3/4 | 1.4 |
| 1.4 | 39 | MICROWAVE | 1 | 20 | 2 | 12 | 12 | 3/4 | 40 | DISHWASHER | 1 | 20 | 2 | 12 | 12 | 3/4 | 1.0 |
| | 41 | SPARE | 1 | 20 | | | | | 42 | ANSUL SYSTEM | 1 | 20 | 2 | 12 | 12 | 3/4 | 0.5 |

CONNECTED LOAD (SECTION I) 41.2 KVA | KVA PER PHASE: A 12.7 B 14.5 C 14

## PANEL PR3A (SECTION II)

MOUNTING:SURFACE
VOLTAGE:208/120
LOCATION:ELECTRICAL CLOSET 1309
225 AMPERE BUS | 225A MLO | 200% RATED NEUTRAL BUS | 10,000 A.I.C.

| CONN KVA | CKT | DESCRIPTION | BREAKER P | BREAKER AMPS | CIRCUIT WIRING NO | SIZE | GND | C | CKT | DESCRIPTION | BREAKER P | BREAKER AMPS | CIRCUIT WIRING NO | SIZE | GND | C | CONN KVA |
|---|---|---|---|---|---|---|---|---|---|---|---|---|---|---|---|---|---|
| 0.8 | 43 | RECEPTACLES | 1 | 20 | 2 | 12 | 12 | 3/4 | 44 | | | | | | | | |
| 2.5 | 45 | RANGE | 2 | 50 | 3 | 8 | 10 | 3/4 | 46 | | | | | | | | |
| 2.5 | 47 | -- | - | - | - | - | - | - | 48 | | | | | | | | |
| | 49 | | | | | | | | 50 | | | | | | | | |
| | 51 | | | | | | | | 52 | | | | | | | | |
| | 53 | | | | | | | | 54 | | | | | | | | |
| | 55 | | | | | | | | 56 | | | | | | | | |
| | 57 | | | | | | | | 58 | | | | | | | | |
| | 59 | | | | | | | | 60 | | | | | | | | |
| | 61 | | | | | | | | 62 | | | | | | | | |
| | 63 | | | | | | | | 64 | | | | | | | | |
| | 65 | | | | | | | | 66 | | | | | | | | |
| | 67 | | | | | | | | 68 | | | | | | | | |
| | 69 | | | | | | | | 70 | | | | | | | | |
| | 71 | | | | | | | | 72 | | | | | | | | |
| | 73 | | | | | | | | 74 | | | | | | | | |
| | 75 | | | | | | | | 76 | | | | | | | | |
| | 77 | | | | | | | | 78 | | | | | | | | |
| | 79 | | | | | | | | 80 | | | | | | | | |
| | 81 | | | | | | | | 82 | | | | | | | | |
| | 83 | | | | | | | | 84 | | | | | | | | |

CONNECTED LOAD (SECTION II) 5.8 KVA | KVA PER PHASE: A 0.8 B 2.5 C 2.5
TOTAL CONNECTED LOAD 47 KVA | KVA PER PHASE: A 13.5 B 17 C 16.5

## PANEL RDPA

I-LINE PANEL INTEGRAL WITH PDU-A
MOUNTING: SURFACE
VOLTAGE: 208/120V,3P,4W
LOCATION: M/E CLOSET
600 AMPERE BUS | 600 A MCB | 100% RATED NEUTRAL BUS | 10,000 A.I.C.

| CONN KVA | CKT | DESCRIPTION | BREAKER P | BREAKER AMPS | CIRCUIT WIRING NO | SIZE | GND | C | CKT | DESCRIPTION | BREAKER P | BREAKER AMPS | CIRCUIT WIRING NO | SIZE | GND | C | CONN KVA |
|---|---|---|---|---|---|---|---|---|---|---|---|---|---|---|---|---|---|
| 22.0 | 1 | REMOTE DISTRIBUTION | 3 | 225 | 4 | 3/0 | 4 | 2 | 2 | REMOTE DISTRIBUTION | 3 | 100 | 4 | 2 | 6 | 1-1/2 | 5.0 |
| 22.0 | 3 | PANEL RD13A | - | - | - | - | - | - | 4 | PANEL RD1A | - | - | - | - | - | - | 5.0 |
| 22.0 | 5 | -- | - | - | - | - | - | - | 6 | -- | - | - | - | - | - | - | 5.0 |
| | 7 | | | | | | | | 8 | REMOTE DISTRIBUTION | 3 | 100 | 4 | 2 | 6 | 1-1/2 | 5.0 |
| | 9 | | | | | | | | 10 | PANEL RD2A | - | - | - | - | - | - | 5.0 |
| | 11 | | | | | | | | 12 | -- | - | - | - | - | - | - | 5.0 |
| | 13 | | | | | | | | 14 | REMOTE DISTRIBUTION | 3 | 100 | 4 | 2 | 6 | 1-1/2 | 5.0 |
| | 15 | | | | | | | | 16 | PANEL RD3A | - | - | - | - | - | - | 5.0 |
| | 17 | | | | | | | | 18 | -- | - | - | - | - | - | - | 5.0 |
| | 19 | | | | | | | | 20 | REMOTE DISTRIBUTION | 3 | 100 | 4 | 2 | 6 | 1-1/2 | 5.0 |
| | 21 | | | | | | | | 22 | PANEL RD4A | - | - | - | - | - | - | 5.0 |
| | 23 | | | | | | | | 24 | -- | - | - | - | - | - | - | 5.0 |
| | 25 | | | | | | | | 26 | REMOTE DISTRIBUTION | 3 | 100 | 4 | 2 | 6 | 1-1/2 | 5.0 |
| | 27 | | | | | | | | 28 | PANEL RD5A | - | - | - | - | - | - | 5.0 |
| | 29 | | | | | | | | 30 | -- | - | - | - | - | - | - | 5.0 |
| | 31 | | | | | | | | 32 | REMOTE DISTRIBUTION | 3 | 100 | 4 | 2 | 6 | 1-1/2 | 6.2 |
| | 33 | | | | | | | | 34 | PANEL RD6A | - | - | - | - | - | - | 6.2 |
| | 35 | | | | | | | | 36 | -- | - | - | - | - | - | - | 6.2 |
| | 37 | | | | | | | | 38 | | | | | | | | |
| | 39 | | | | | | | | 40 | | | | | | | | |
| | 41 | | | | | | | | 42 | | | | | | | | |

TOTAL CONNECTED LOAD 159.6 KVA | KVA PER PHASE: A 53.2 B 53.2 C 53.2

## PANEL RDPB

I-LINE PANEL INTEGRAL WITH PDU-B
MOUNTING: SURFACE
VOLTAGE: 208/120V,3P,4W
LOCATION: M/E CLOSET
600 AMPERE BUS | 600 A MCB | 100% RATED NEUTRAL BUS | 10,000 A.I.C.

| CONN KVA | CKT | DESCRIPTION | BREAKER P | BREAKER AMPS | CIRCUIT WIRING NO | SIZE | GND | C | CKT | DESCRIPTION | BREAKER P | BREAKER AMPS | CIRCUIT WIRING NO | SIZE | GND | C | CONN KVA |
|---|---|---|---|---|---|---|---|---|---|---|---|---|---|---|---|---|---|
| 10.0 | 1 | REMOTE DISTRIBUTION | 3 | 225 | 4 | 3/0 | 4 | 2 | 2 | REMOTE DISTRIBUTION | 3 | 100 | 4 | 2 | 6 | 1-1/2 | 5.0 |
| 10.0 | 3 | PANEL RD13B | - | - | - | - | - | - | 4 | PANEL RD1B | - | - | - | - | - | - | 5.0 |
| 10.0 | 5 | -- | - | - | - | - | - | - | 6 | -- | - | - | - | - | - | - | 5.0 |
| | 7 | | | | | | | | 8 | REMOTE DISTRIBUTION | 3 | 100 | 4 | 2 | 6 | 1-1/2 | 5.0 |
| | 9 | | | | | | | | 10 | PANEL RD2B | - | - | - | - | - | - | 5.0 |
| | 11 | | | | | | | | 12 | -- | - | - | - | - | - | - | 5.0 |
| | 13 | | | | | | | | 14 | REMOTE DISTRIBUTION | 3 | 100 | 4 | 2 | 6 | 1-1/2 | 5.0 |
| | 15 | | | | | | | | 16 | PANEL RD3B | - | - | - | - | - | - | 5.0 |
| | 17 | | | | | | | | 18 | -- | - | - | - | - | - | - | 5.0 |
| | 19 | | | | | | | | 20 | REMOTE DISTRIBUTION | 3 | 100 | 4 | 2 | 6 | 1-1/2 | 5.0 |
| | 21 | | | | | | | | 22 | PANEL RD4B | - | - | - | - | - | - | 5.0 |
| | 23 | | | | | | | | 24 | -- | - | - | - | - | - | - | 5.0 |
| | 25 | | | | | | | | 26 | REMOTE DISTRIBUTION | 3 | 100 | 4 | 2 | 6 | 1-1/2 | 5.0 |
| | 27 | | | | | | | | 28 | PANEL RD5B | - | - | - | - | - | - | 5.0 |
| | 29 | | | | | | | | 30 | -- | - | - | - | - | - | - | 5.0 |
| | 31 | | | | | | | | 32 | REMOTE DISTRIBUTION | 3 | 100 | 4 | 2 | 6 | 1-1/2 | 6.2 |
| | 33 | | | | | | | | 34 | PANEL RD6B | - | - | - | - | - | - | 6.2 |
| | 35 | | | | | | | | 36 | -- | - | - | - | - | - | - | 6.2 |
| | 37 | | | | | | | | 38 | REMOTE DISTRIBUTION | 3 | 100 | 4 | 2 | 6 | 1-1/2 | 15.0 |
| | 39 | | | | | | | | 40 | PANEL RD15B | - | - | - | - | - | - | 15.0 |
| | 41 | | | | | | | | 42 | -- | - | - | - | - | - | - | 15.0 |

TOTAL CONNECTED LOAD 168.6 KVA | KVA PER PHASE: A 56.2 B 56.2 C 56.2

## PANEL RDPC

I-LINE PANEL INTEGRAL WITH PDU-C
MOUNTING: SURFACE
VOLTAGE: 208/120V,3P,4W
LOCATION: GENSET ROOM
600 AMPERE BUS | 600 A MCB | 100% RATED NEUTRAL BUS | 10,000 A.I.C.

| CONN KVA | CKT | DESCRIPTION | BREAKER P | BREAKER AMPS | CIRCUIT WIRING NO | SIZE | GND | C | CKT | DESCRIPTION | BREAKER P | BREAKER AMPS | CIRCUIT WIRING NO | SIZE | GND | C | CONN KVA |
|---|---|---|---|---|---|---|---|---|---|---|---|---|---|---|---|---|---|
| 22.0 | 1 | REMOTE DISTRIBUTION | 3 | 225 | 4 | 3/0 | 4 | 2 | 2 | REMOTE DISTRIBUTION | 3 | 100 | 4 | 2 | 6 | 1-1/2 | 5.0 |
| 22.0 | 3 | PANEL RD14A | - | - | - | - | - | - | 4 | PANEL RD7A | - | - | - | - | - | - | 5.0 |
| 22.0 | 5 | -- | - | - | - | - | - | - | 6 | -- | - | - | - | - | - | - | 5.0 |
| | 7 | | | | | | | | 8 | REMOTE DISTRIBUTION | 3 | 100 | 4 | 2 | 6 | 1-1/2 | 5.0 |
| | 9 | | | | | | | | 10 | PANEL RD8A | - | - | - | - | - | - | 5.0 |
| | 11 | | | | | | | | 12 | -- | - | - | - | - | - | - | 5.0 |
| | 13 | | | | | | | | 14 | REMOTE DISTRIBUTION | 3 | 100 | 4 | 2 | 6 | 1-1/2 | 5.0 |
| | 15 | | | | | | | | 16 | PANEL RD9A | - | - | - | - | - | - | 5.0 |
| | 17 | | | | | | | | 18 | -- | - | - | - | - | - | - | 5.0 |
| | 19 | | | | | | | | 20 | REMOTE DISTRIBUTION | 3 | 100 | 4 | 2 | 6 | 1-1/2 | 5.0 |
| | 21 | | | | | | | | 22 | PANEL RD10A | - | - | - | - | - | - | 5.0 |
| | 23 | | | | | | | | 24 | -- | - | - | - | - | - | - | 5.0 |
| | 25 | | | | | | | | 26 | REMOTE DISTRIBUTION | 3 | 100 | 4 | 2 | 6 | 1-1/2 | 5.0 |
| | 27 | | | | | | | | 28 | PANEL RD11A | - | - | - | - | - | - | 5.0 |
| | 29 | | | | | | | | 30 | -- | - | - | - | - | - | - | 5.0 |
| | 31 | | | | | | | | 32 | REMOTE DISTRIBUTION | 3 | 100 | 4 | 2 | 6 | 1-1/2 | 5.0 |
| | 33 | | | | | | | | 34 | PANEL RD12A | - | - | - | - | - | - | 5.0 |
| | 35 | | | | | | | | 36 | -- | - | - | - | - | - | - | 5.0 |
| | 37 | | | | | | | | 38 | | | | | | | | |
| | 39 | | | | | | | | 40 | | | | | | | | |
| | 41 | | | | | | | | 42 | | | | | | | | |

TOTAL CONNECTED LOAD 156.0 KVA | KVA PER PHASE: A 52 B 52 C 52

## PANEL RDPD

I-LINE PANEL INTEGRAL WITH PDU-D
MOUNTING: SURFACE
VOLTAGE: 208/120V,3P,4W
LOCATION: GENSET ROOM
600 AMPERE BUS | 600 A MCB | 100% RATED NEUTRAL BUS | 10,000 A.I.C.

| CONN KVA | CKT | DESCRIPTION | BREAKER P | BREAKER AMPS | CIRCUIT WIRING NO | SIZE | GND | C | CKT | DESCRIPTION | BREAKER P | BREAKER AMPS | CIRCUIT WIRING NO | SIZE | GND | C | CONN KVA |
|---|---|---|---|---|---|---|---|---|---|---|---|---|---|---|---|---|---|
| 10.0 | 1 | REMOTE DISTRIBUTION | 3 | 225 | 4 | 3/0 | 4 | 2 | 2 | REMOTE DISTRIBUTION | 3 | 100 | 4 | 2 | 6 | 1-1/2 | 5.0 |
| 10.0 | 3 | PANEL RD14B | - | - | - | - | - | - | 4 | PANEL RD7B | - | - | - | - | - | - | 5.0 |
| 10.0 | 5 | -- | - | - | - | - | - | - | 6 | -- | - | - | - | - | - | - | 5.0 |
| | 7 | | | | | | | | 8 | REMOTE DISTRIBUTION | 3 | 100 | 4 | 2 | 6 | 1-1/2 | 5.0 |
| | 9 | | | | | | | | 10 | PANEL RD8B | - | - | - | - | - | - | 5.0 |
| | 11 | | | | | | | | 12 | -- | - | - | - | - | - | - | 5.0 |
| | 13 | | | | | | | | 14 | REMOTE DISTRIBUTION | 3 | 100 | 4 | 2 | 6 | 1-1/2 | 5.0 |
| | 15 | | | | | | | | 16 | PANEL RD9B | - | - | - | - | - | - | 5.0 |
| | 17 | | | | | | | | 18 | -- | - | - | - | - | - | - | 5.0 |
| | 19 | | | | | | | | 20 | REMOTE DISTRIBUTION | 3 | 100 | 4 | 2 | 6 | 1-1/2 | 5.0 |
| | 21 | | | | | | | | 22 | PANEL RD10B | - | - | - | - | - | - | 5.0 |
| | 23 | | | | | | | | 24 | -- | - | - | - | - | - | - | 5.0 |
| | 25 | | | | | | | | 26 | REMOTE DISTRIBUTION | 3 | 100 | 4 | 2 | 6 | 1-1/2 | 5.0 |
| | 27 | | | | | | | | 28 | PANEL RD11B | - | - | - | - | - | - | 5.0 |
| | 29 | | | | | | | | 30 | -- | - | - | - | - | - | - | 5.0 |
| | 31 | | | | | | | | 32 | REMOTE DISTRIBUTION | 3 | 100 | 4 | 2 | 6 | 1-1/2 | 5.0 |
| | 33 | | | | | | | | 34 | PANEL RD12B | - | - | - | - | - | - | 5.0 |
| | 35 | | | | | | | | 36 | -- | - | - | - | - | - | - | 5.0 |
| | 37 | | | | | | | | 38 | REMOTE DISTRIBUTION | 3 | 100 | 4 | 2 | 6 | 1-1/2 | 6.0 |
| | 39 | | | | | | | | 40 | PANEL RD15B | - | - | - | - | - | - | 6.0 |
| | 41 | | | | | | | | 42 | -- | - | - | - | - | - | - | 6.0 |

TOTAL CONNECTED LOAD 138.0 KVA | KVA PER PHASE: A 46 B 46 C 46

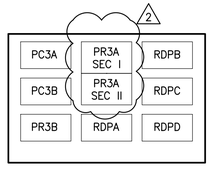



EDMEADES & STROMDAHL, LTD.
11 North Main Street
Bel Air, Maryland 21014
phone: 410.879.0388
Fax: 410.879.4785
E-mail: lbyte@edarch.com

Gipe Associates Inc.
Consulting Engineers
849 Fairmount Ave Suite 102
Towson, Maryland 21286
P (410)832-2420
F (410)832-2418
Easton, Maryland
W.O.# 08095


PANEL SCHEDULES IV

HARFORD COUNTY E.O.C.
PHASE 1 COMMUNICATIONS BUILDING
2220 ADY ROAD
FOREST HILL, MD 21050

COPYRIGHTED EDMEADES & STROMDAHL, LTD. 2008

Job No: 07033
Date: DEC. 18, 2012
Rev:
2 2/15/13-ADD #2

BID DOCUMENTS

Sheet No.
EA8.4

## EOC SCHEDULE OF EQUIPMENT SERVICES

| EQUIPMENT SERVED | HP | LOCATION | MOUNTING | SERVICE | | | DISCONNECT | | | PANEL | | REMARKS |
|---|---|---|---|---|---|---|---|---|---|---|---|---|
| | | | | PH | VOLT | KVA | P | SW | FU | FROM | ENCL | |
| WSHP 0-1 | 1/2 | GROUND FLOOR | ON UNIT | | 480/3 | 7.562 | 3 | 30 | 15 | MP1 | 1 | (3) |
| WSHP 0-2 | 1/2 | GROUND FLOOR | ON UNIT | | 480/3 | 5.734 | 3 | 30 | 15 | MP1 | 1 | (3) |
| WSHP 0-3 | 3/4 | GROUND FLOOR | ON UNIT | | 480/3 | 8.144 | 3 | 30 | 15 | MP1 | 1 | (3) |
| WSHP 0-4 | 1/3 | GROUND FLOOR | ON UNIT | | 277/1 | 1.496 | 2 | 30 | 15 | MP1 | 1 | (3) |
| WSHP 1-1 | 1/2 | FIRST FLOOR | ON UNIT | | 277/1 | 4.654 | 2 | 30 | 25 | MP2 | 1 | (3) |
| WSHP 1-2 | 3/4 | FIRST FLOOR | ON UNIT | | 480/3 | 8.144 | 3 | 30 | 15 | MP2 | 1 | (3) |
| WSHP 1-3 | 3 | FIRST FLOOR | ON UNIT | | 480/3 | 19.78 | 3 | 30 | 30 | MP2 | 1 | (3) |
| WSHP 1-4 | 1/2 | FIRST FLOOR | ON UNIT | | 480/3 | 5.734 | 3 | 30 | 15 | MP2 | 1 | (3) |
| WSHP 1-5 | 1/3 | FIRST FLOOR | ON UNIT | | 277/1 | 2.853 | 2 | 30 | 15 | MP2 | 1 | (3) |
| WSHP 1-6 | 1/3 | FIRST FLOOR | ON UNIT | | 277/1 | 2.853 | 2 | 30 | 15 | MP2 | 1 | (3) |
| WSHP 1-7 | 3/4 | FIRST FLOOR | ON UNIT | | 480/3 | 8.144 | 3 | 30 | 15 | MP2 | 1 | (3) |
| WSHP 1-8 | 1/2 | FIRST FLOOR | ON UNIT | | 480/3 | 7.645 | 3 | 30 | 15 | MP2 | 1 | (3) |
| WSHP 1-9 | 1/8 | FIRST FLOOR | ON UNIT | | 277/1 | 1.994 | 2 | 30 | 15 | MP2 | 1 | (3) |
| WSHP 1-10 | 1/2 | FIRST FLOOR | ON UNIT | | 277/1 | 2.715 | 2 | 30 | 25 | MP2 | 1 | (3) |
| WSHP 1-11 | 1/2 | FIRST FLOOR | ON UNIT | | 277/1 | 2.715 | 2 | 30 | 25 | MP2 | 1 | (3) |
| WSHP 1-12 | 1/2 | FIRST FLOOR | ON UNIT | | 277/1 | 4.654 | 2 | 30 | 25 | MP2 | 1 | (3) |
| WSHP 1-13 | 1/2 | FIRST FLOOR | ON UNIT | | 480/3 | 9.723 | 3 | 30 | 15 | MP2 | 1 | (3) |
| WSHP 1-14 | 1/3 | FIRST FLOOR | ON UNIT | | 277/1 | 2.078 | 2 | 30 | 15 | MP2 | 1 | (3) |
| WSHP 1-15 | 3/4 | FIRST FLOOR | ON UNIT | | 480/3 | 7.562 | 3 | 30 | 15 | MP2 | 1 | (3) |
| WSHP 1-16 | 1/8 | FIRST FLOOR | ON UNIT | | 277/1 | 2.078 | 2 | 30 | 15 | MP2 | 1 | (3) |
| WSHP 1-17 | 3/4 | FIRST FLOOR | ON UNIT | | 480/3 | 8.144 | 3 | 30 | 15 | MP2 | 1 | (3) |
| WSHP 1-18 | 1/3 | FIRST FLOOR | ON UNIT | | 277/1 | 2.078 | 2 | 30 | 15 | MP2 | 1 | (3) |
| WSHP 1-19 | 1/8 | FIRST FLOOR | ON UNIT | | 277/1 | 2.078 | 2 | 30 | 15 | MP2 | 1 | (3) |
| WSHP 1-20 | 1/6 | FIRST FLOOR | ON UNIT | | 277/1 | 2.659 | 2 | 30 | 15 | MP2 | 1 | (3) |
| WSHP 1-21 | 3/4 | FIRST FLOOR | ON UNIT | | 480/3 | 8.144 | 3 | 30 | 15 | MP2 | 1 | (3) |
| WSHP 1-22 | 1/8 | FIRST FLOOR | ON UNIT | | 277/1 | 1.662 | 2 | 30 | 15 | MP2 | 1 | (3) |
| WSHP 1-23 | 3/4 | FIRST FLOOR | ON UNIT | | 480/3 | 7.562 | 3 | 30 | 15 | MP2 | 1 | (3) |
| WSHP 1-24 | 1/3 | FIRST FLOOR | ON UNIT | | 277/1 | 2.078 | 2 | 30 | 15 | MP2 | 1 | (3) |
| WSHP 1-25 | 1/3 | FIRST FLOOR | ON UNIT | | 277/1 | 2.161 | 2 | 30 | 15 | MP2 | 1 | (3) |
| WSHP 1-26 | 1/3 | FIRST FLOOR | ON UNIT | | 277/1 | 1.496 | 2 | 30 | 15 | MP2 | 1 | (3) |
| WSHP 2-1 | 1/3 | SECOND FLOOR | ON UNIT | | 277/1 | 2.078 | 2 | 30 | 15 | MP3 | 1 | (3) |
| WSHP 2-2 | 3/4 | SECOND FLOOR | ON UNIT | | 480/3 | 7.562 | 3 | 30 | 15 | MP3 | 1 | (3) |
| WSHP 2-3 | 1/2 | SECOND FLOOR | ON UNIT | | 277/1 | 4.654 | 2 | 30 | 25 | MP3 | 1 | (3) |
| WSHP 2-4 | 1/2 | SECOND FLOOR | ON UNIT | | 480/3 | 7.313 | 3 | 30 | 15 | MP3 | 1 | (3) |
| WSHP 2-5 | 1/2 | SECOND FLOOR | ON UNIT | | 480/3 | 7.313 | 3 | 30 | 15 | MP3 | 1 | (3) |
| WSHP 2-6 | 1/2 | SECOND FLOOR | ON UNIT | | 480/3 | 7.562 | 3 | 30 | 15 | MP3 | 1 | (3) |
| WSHP 2-7 | 1/3 | SECOND FLOOR | ON UNIT | | 277/1 | 2.078 | 2 | 30 | 15 | MP3 | 1 | (3) |
| WSHP 2-8 | 1/3 | SECOND FLOOR | ON UNIT | | 277/1 | 2.078 | 2 | 30 | 15 | MP3 | 1 | (3) |
| WSHP 2-9 | 1/3 | SECOND FLOOR | ON UNIT | | 277/1 | 2.078 | 2 | 30 | 15 | MP3 | 1 | (3) |
| WSHP 2-10 | 1/3 | SECOND FLOOR | ON UNIT | | 277/1 | 2.078 | 2 | 30 | 15 | MP3 | 1 | (3) |
| WSHP 2-11 | 1/3 | SECOND FLOOR | ON UNIT | | 277/1 | 2.078 | 2 | 30 | 15 | MP3 | 1 | (3) |
| WSHP 2-12 | 1/2 | SECOND FLOOR | ON UNIT | | 480/3 | 9.473 | 3 | 30 | 15 | MP3 | 1 | (3) |
| WSHP 2-13 | 1/2 | SECOND FLOOR | ON UNIT | | 480/3 | 7.562 | 3 | 30 | 15 | MP3 | 1 | (3) |
| WSHP 2-14 | 1/3 | SECOND FLOOR | ON UNIT | | 277/1 | 2.078 | 2 | 30 | 15 | MP3 | 1 | (3) |
| WSHP 2-15 | 1/2 | SECOND FLOOR | ON UNIT | | 480/3 | 8.144 | 3 | 30 | 15 | MP3 | 1 | (3) |
| ERV-1 | 5+3 | ROOF | ON UNIT | 3 | 480 | 34.0 | ~ | ~ | ~ | MD3 | ~ | (1) |
| ERV-2 | 7.5+5 | ROOF | ON UNIT | 3 | 480 | 34.0 | ~ | ~ | ~ | MD3 | ~ | (1) |
| RTU-1 | 15+5 | ROOF | ON UNIT | 3 | 480 | 110.0 | ~ | ~ | ~ | MD3 | ~ | (1) |
| RTU-2 | 15+5 | ROOF | ON UNIT | 3 | 480 | 110.0 | ~ | ~ | ~ | MD3 | ~ | (1) |
| RTU-3 | 20+10 | ROOF | ON UNIT | 3 | 480 | 228.0 | ~ | ~ | ~ | MD3 | ~ | (1) |
| RTU-4 | 20+10 | ROOF | ON UNIT | 3 | 480 | 228.0 | ~ | ~ | ~ | MD3 | ~ | (1) |
| AC-1 | 7.5 | TRANSMITTER ROOM 218 | WALL | 3 | 480 | 26.0 | 3 | 60 | 40 | MD3 | 1 | |
| AC-2 | 7.5 | TRANSMITTER ROOM 218 | WALL | 3 | 480 | 26.0 | 3 | 60 | 40 | MD3 | 1 | |
| AC-3 | 7.5 | DATA SERVER | WALL | 3 | 480 | 26.0 | 3 | 60 | 40 | MD3 | 1 | |
| AC-4 | 7.5 | DATA SERVER | WALL | 3 | 480 | 26.0 | 3 | 60 | 40 | MD3 | 1 | |
| AC-5 | 7.5 | UPS ROOM | WALL | 3 | 480 | 26.0 | 3 | 60 | 40 | MD3 | 1 | |
| AC-6 | 7.5 | UPS ROOM | WALL | 3 | 480 | 26.0 | 3 | 60 | 40 | MD3 | 1 | |
| AC-7 | 7.5 | UPS ROOM | WALL | 3 | 480 | 26.0 | 3 | 60 | 40 | MD3 | 1 | |

## EOC SCHEDULE OF EQUIPMENT SERVICES

| EQUIPMENT SERVED | HP | LOCATION | MOUNTING | SERVICE | | | DISCONNECT | | | PANEL | | REMARKS |
|---|---|---|---|---|---|---|---|---|---|---|---|---|
| | | | | PH | VOLT | KVA | P | SW | FU | FROM | ENCL | |
| AC-8 | 2 | M/E ROOM | WALL | 3 | 480 | 9.3 | 3 | 30 | 15 | MD1 | 1 | |
| AC-9 | 2 | M/E ROOM | WALL | 3 | 480 | 9.3 | 3 | 30 | 15 | MD1 | 1 | |
| AC-10 (INDOOR) | ~ | ROOF | FLOOR | 1 | 208 | 1.0 | ~ | ~ | ~ | MR1 | 1 | (1) |
| AC-11 (INDOOR) | ~ | ROOF | FLOOR | 1 | 208 | 1.0 | ~ | ~ | ~ | MR1 | 1 | (1) |
| AC-12 (INDOOR) | ~ | ROOF | FLOOR | 1 | 208 | 1.0 | ~ | ~ | ~ | MR1 | 1 | (1) |
| AC-10 (OUTDOOR) | ~ | ROOF | FLOOR | 1 | 208 | 1.0 | ~ | ~ | ~ | MR1 | 1 | (1) |
| AC-11 (OUTDOOR) | ~ | ROOF | FLOOR | 1 | 208 | 1.0 | ~ | ~ | ~ | MR1 | 1 | (1) |
| AC-12 (OUTDOOR) | ~ | ROOF | FLOOR | 1 | 208 | 1.0 | ~ | ~ | ~ | MR1 | 1 | (1) |
| P-1 | 125 | PUMP ROOM | WALL | 3 | 480 | 130.0 | ~ | ~ | ~ | MD1 | ~ | (2) |
| P-2 (STAND-BY) | 125 | PUMP ROOM | WALL | 3 | 480 | 130.0 | ~ | ~ | ~ | MD1 | ~ | (2) |
| EWH-1 | 4 | STAIR 2 | WALL | 1 | 208 | 4.0 | ~ | ~ | ~ | MR1 | ~ | (1) |
| EWH-2 | 4 | STAIR 3 | WALL | 1 | 208 | 4.0 | ~ | ~ | ~ | MR1 | ~ | (1) |
| EWH-3 | 4 | STAIR 3 | WALL | 1 | 208 | 4.0 | ~ | ~ | ~ | MR1 | ~ | (1) |
| EUH-1 | 5 | FIRE PUMP | ON UNIT | 3 | 480 | 5.0 | ~ | ~ | ~ | MP1 | ~ | (1) |
| EUH-2 | 5 | FIRE PUMP | ON UNIT | 3 | 480 | 5.0 | ~ | ~ | ~ | MP1 | ~ | (1) |
| EUH-3 | 5 | PUMP ROOM | ON UNIT | 3 | 480 | 5.0 | ~ | ~ | ~ | MP1 | ~ | (1) |
| EUH-4 | 5 | PUMP ROOM | ON UNIT | 3 | 480 | 5.0 | ~ | ~ | ~ | MP1 | ~ | (1) |
| F-1 | 1/2 | FIRE PUMP | ON UNIT | 3 | 480 | 0.8 | 3 | 30 | 15 | MP1 | 1 | (3) |
| F-2 | 3/4 | PUMP ROOM | ON UNIT | 3 | 480 | 1.2 | 3 | 30 | 15 | MP1 | 1 | (3) |
| F-3 | 1-1/2 | CORRIDOR | ON UNIT | 3 | 480 | 2.2 | 3 | 30 | 15 | MP1 | 1 | (3) |
| F-4 | 1 | CORRIDOR | ON UNIT | 3 | 480 | 1.5 | 3 | 30 | 15 | MP1 | 1 | (3) |
| F-5 | 1 | ROOF | ON UNIT | 3 | 480 | 0.5 | 3 | 30 | 15 | MP1 | 1 | (3) |
| F-6 | 1-1/2 | ROOF | ON UNIT | 3 | 480 | 2.2 | 3 | 30 | 15 | MP3 | 3R | (3) |
| FIRE PUMP (AND JOCKEY PUMP) PAKAGE | 25+3/4 | BASEMENT | INTEGRAL CONTROLLER | 3 | 480 | 36.0 | REFER TO RISER DIAGRAM | | | | | (5) |
| PRE-ACTION ZONE 2 | 1/2 | BASEMENT | ON UNIT | 1 | 120 | 1.2 | ~ | ~ | ~ | E1R1 | 1 | (1) |
| PRE-ACTION ZONE 4 | 1/2 | BASEMENT | ON UNIT | 1 | 120 | 1.2 | ~ | ~ | ~ | E1R1 | 1 | (1) |
| PRE-ACTION ZONE 6 | 1/2 | BASEMENT | ON UNIT | 1 | 120 | 1.2 | ~ | ~ | ~ | E1R1 | 1 | (1) |
| PRE-ACTION ZONE 7 | 1/2 | SECOND FLOOR | ON UNIT | 1 | 120 | 1.2 | ~ | ~ | ~ | E1R1 | 1 | (1) |
| PRE-ACTION ZONE 8 | 1/2 | SECOND FLOOR | ON UNIT | 1 | 120 | 1.2 | ~ | ~ | ~ | E1R1 | 1 | (1) |
| VAC-1 | 7.5 | BASEMENT | WALL | 3 | 480 | 9.1 | 3 | 30 | 20 | MP1 | 1 | |
| TRAP PRIMER | ~ | BASEMENT | ON UNIT | 1 | 120 | 0.5 | ~ | ~ | ~ | MR1 | 1 | (6) |
| TRAP PRIMER | ~ | FIRST FLOOR | ON UNIT | 1 | 120 | 0.5 | ~ | ~ | ~ | MR1 | 1 | (6) |
| TRAP PRIMER | ~ | SECOND FLOOR | ON UNIT | 1 | 120 | 0.5 | ~ | ~ | ~ | MR1 | 1 | (6) |
| MIXING VALVE | ~ | BASEMENT | WALL | 1 | 120 | 0.2 | ~ | ~ | ~ | MR1 | ~ | (7) |
| WATER TO WATER HEAT PUMP | ~ | BASEMENT | WALL | 3 | 480 | 20.3 | 3 | 60 | 35 | MD1 | 1 | |
| P-1 | 1 | BASEMENT | ON UNIT | 1 | 120 | 1.9 | ~ | ~ | ~ | MR1 | 1 | (4) |
| P-2 | .5 | BASEMENT | ON UNIT | 1 | 120 | 1.2 | ~ | ~ | ~ | MR1 | 1 | (4) |
| P-3 | 1 | BASEMENT | ON UNIT | 1 | 120 | 1.9 | ~ | ~ | ~ | MR1 | 1 | (4) |
| WH-1 | ~ | BASEMENT | WALL | 3 | 480 | 12.0 | 3 | 30 | 20 | MP1 | 1 | |
| OIL MINDER | ~ | BASEMENT | ON UNIT | 1 | 120 | 0.2 | ~ | ~ | ~ | MR1 | 1 | (6) |
| PUMPING STATION PUMP 1 | 3 | SITE PLAN | WALL | 1 | 208 | 3.5 | 3 | 60 | 35 | MR1 | 3R | (8) |
| PUMPING STATION PUMP 2 | 3 | SITE PLAN | WALL | 1 | 208 | 3.5 | 3 | 60 | 35 | MR1 | 3R | (8) |
| PUMP CONTROLS | ~ | SITE PLAN | WALL | 1 | 120 | 1.0 | 1 | 30 | ~ | MR1 | 3R | (9) |
| H-1 | | KITCHEN HOOD | ON UNIT | 1 | 120 | 0.6 | ~ | ~ | ~ | PR2A | 1 | (4) |
| EH-1 | 5KW | CEILING | ON UNIT | 1 | 208 | 5.0 | ~ | ~ | ~ | MP2 | 1 | (1) |
| EH-2 | 5KW | CEILING | ON UNIT | 1 | 208 | 5.0 | ~ | ~ | ~ | MP2 | 1 | (1) |
| CU-1 | | ROOF | ON UNIT | 3 | 480 | 13.2 | 3 | 30 | 20 | MP3 | 3R | (3) |
| HP-1 | | KITCHEN | ON UNIT | 3 | 480 | 1.7 | 3 | 30 | 15 | MP3 | 1 | (3) |
| HP-1 Heater | 10kw | KITCHEN | ON UNIT | 3 | 480 | 10.0 | 3 | 30 | 20 | MP3 | 1 | (3) |
| DOMESTIC WATER BOOSTER SYSTEM | 3 @ 3 | BASEMENT | INTERNAL | 3 | 480 | 14.0 | ~ | ~ | ~ | MP1 | 1 | (10) |

(1) CONNECT TO UNIT PROVIDED NON-FUSED DISCONNECT SWITCH.
(2) CONNECT TO UNIT PROVIDED VFD.
(3) PROVIDE WITH COMBINATION TYPE MOTOR STARTER; FVNR WITH CONTROL XFMR, RED AND GREEN INDICATING LIGHTS, HOA SELECTOR SWITCH AND FUSED DISCONNECT SWITCH IN NEMA 1 ENCLOSURE UON; MOUNT AT 5'-6" TO TOP AFF UON.
(4) FRACTIONAL HORSEPOWER MANUAL MOTOR STARTED WITH OVERLOADS PER EQUIPMENT MANUFACTURER AND HOA SWITCH.
(5) MAKE CONNECTION TO FIRE PUMP CONTROLLER AS NECESSARY. EXTEND ALL WIRING FROM CONTROLLER TO FIRE PUMP AND JOCKEY PUMP AS REQUIRED PER MANUFACTURER'S RECOMMENDATIONS.
(6) PROVIDE HARDWIRED CONNECTION TO UNIT
(7) PROVIDE GFCI OUTLET AND MAKE CONNECTION TO UNIT AS REQUIRED
(8) CONNECT TO PUMPING STATION FURNISHED ANOTHER DIVISION.
(9) CONNECT TO PUMP CONTROLLER FURNISHED ANOTHER DIVISION.
(10) CONNECT TO CONTROL PANEL INCLUDED WITH UNIT

2


EDMEADES & STROMDAHL, LTD.
11 North Main Street
Phone: 410.879.0388
E-mail: lhyde@eslarch.com
Bel Air, Maryland 21014
Fax: 410.879.4785

Gipe Associates Inc.
Consulting Engineers
849 Fairmount Ave Suite 102
Baltimore, Maryland 21286
P (410)832-2420
F (410)832-2418
Easton, Maryland
W.O.# 08095


MECHANICAL EQUIPMENT CONNECTION SCHEDULES

HARFORD COUNTY E.O.C.
PHASE 1 COMMUNICATIONS BUILDING
2220 ADY ROAD
FOREST HILL, MD 21050

COPYRIGHTED EDMEADES & STROMDAHL, LTD. 2008

Job No: 07033

Date: DEC. 18, 2012

Rev:
2 2/15/13-ADD #2

BID DOCUMENTS

Sheet No.
EA8.8

STROMDAHL

EDMEADES